LX-ÜBERGANGSSTÜCK M.SPITZENDE DN 40

LORO-X connecting piece with spigot end and VG flange 85228 DN 40

Opis

LORO-X transition piece with VG-flange 85228 and push-fit socket connection, according to DIN EN 1123, made of steel, hot-dip galvanized, long-life inside coating according to DIN EN ISO 2178 on the basis of a 2-component epoxy combination, colour: red-brown, DN40

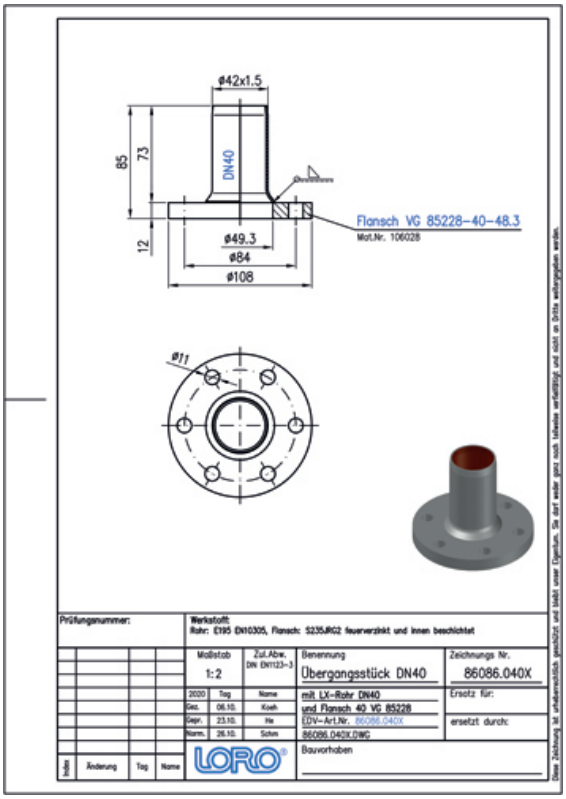

Podaci o artiklu

EAN kod	4038088104620
ETIM klasa	EC003024
Nazivni promjer	DN 40
Vanjske mjere (VxŠxD)	108 x 108 x 85 mm
Težina	0,80 Kg (STK)
Grupa proizvoda	8
Carinski tarifni broj	73089098
Materijal / Boja	Stahl feuerverzinkt, Silber

Napomena za upotrebu

kein Verwendungshinweis notwendig

Preuzimanja

Alles online

Upute za ugradnju (PDF)
Dimenzijski crtež (PDF)
Prospekt (PDF)
CAD 2D (DXF)
CAD 3D (DWG)
BIM 3D (STEP)
BIM 3D (IFC)