LX-ÜBERGANGSSTÜCK M.MUFFE DN 50,

LORO-X transition piece with socket and VG flange 85228 DN 50

Descrizione

LORO-X transition piece with VG-flange 85228 and push-fit socket connection, according to DIN EN 1123, made of steel, hot-dip galvanized, long-life inside coating according to DIN EN ISO 2178 on the basis of a 2-component epoxy combination, colour: red-brown DN50

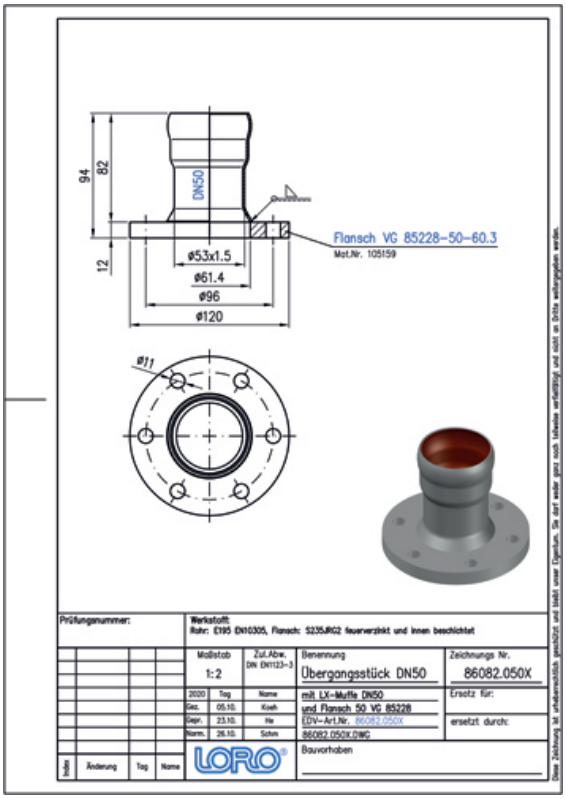

Dati articolo

Codice EAN	**4038088104576**
Classe ETIM	**EC003024**
Diametro nominale	**DN 50**
Misure esterne (AxLxP)	**120 x 120 x 94 mm**
Peso	**0,90 Kg (STK)**
Gruppo prodotti	**8**
Numero tariffa doganale	**73089098**
Materiale / Colore	**Stahl feuerverzinkt, Silber**

Note d'uso

kein Verwendungshinweis notwendig

Download

Alles online

[Istruzioni di installazione (PDF)](#) [Disegno dimensionale (PDF)](#) [Brochure (PDF)](#)
[CAD 2D (DXF)](#) [CAD 3D (DWG)](#) [BIM 3D (STEP)](#)
[BIM 3D (IFC)](#)