LX-FALLROHRSTÜTZE M.BEFESTIGUNGSKONSOLE

LORO-X downpipe support with fixing bracket and sound insulation DN 200

Beschrijving

LORO-X down pipe support with mounting bracket 560mm and sound insulation, in accordance with DIN EN 1123 with raised quality standard, with 2-chamber push-fit socket connection, building material class A1, dimensionally stable, break-proof, backflow-safe, long-life inside coating according to DIN EN ISO 2178 on the basis of a 2-component epoxy combination, colour: red-brown, with clamping ring, DN200

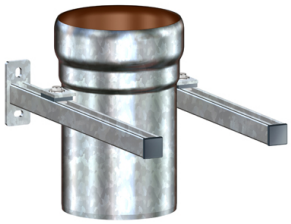

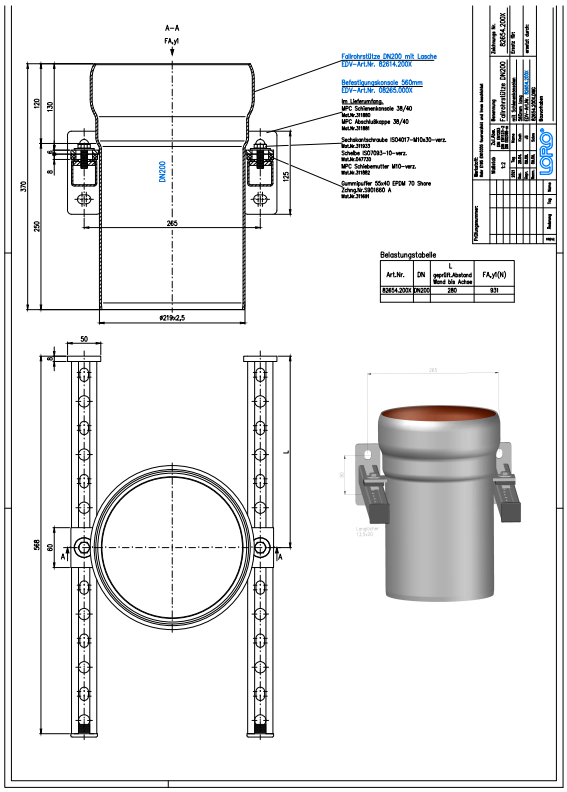

Artikelgegevens

EAN-code	**4038088102060**
ETIM Klasse	**EC003159**
Nominale diameter	**DN 200**
Buitenafmetingen (HxBxL)	**370 x 315 x 573 mm**
Gewicht	**9,40 Kg (STK)**
Productgroep	**1**
Douanetariefnummer	**73089098**
Materiaal / Kleur	**Stahl feuerverzinkt, Silber**

Gebruiksaanwijzing

kein Verwendungshinweis notwendig

Downloads

Alles online

[Maattekening (PDF)](#) [Brochure (PDF)](#) [CAD 2D (DXF)](#)
[CAD 3D (DWG)](#) [BIM 3D (STEP)](#) [BIM 3D (IFC)](#)