LX-FALLROHRSTÜTZE M.BEFESTIGUNGSKONSOLE

LORO-X downpipe support with fastening bracket and sound insulation DN 200

Beskrivning

LORO-X down pipe support with mounting bracket 320mm and sound insulation, in accordance with DIN EN 1123 with raised quality standard, with 2-chamber push-fit socket connection, building material class A1, dimensionally stable, break-proof, backflow-safe, long-life inside coating according to DIN EN ISO 2178 on the basis of a 2-component epoxy combination, colour: red-brown, with clamping ring, DN200

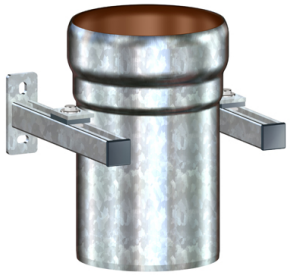

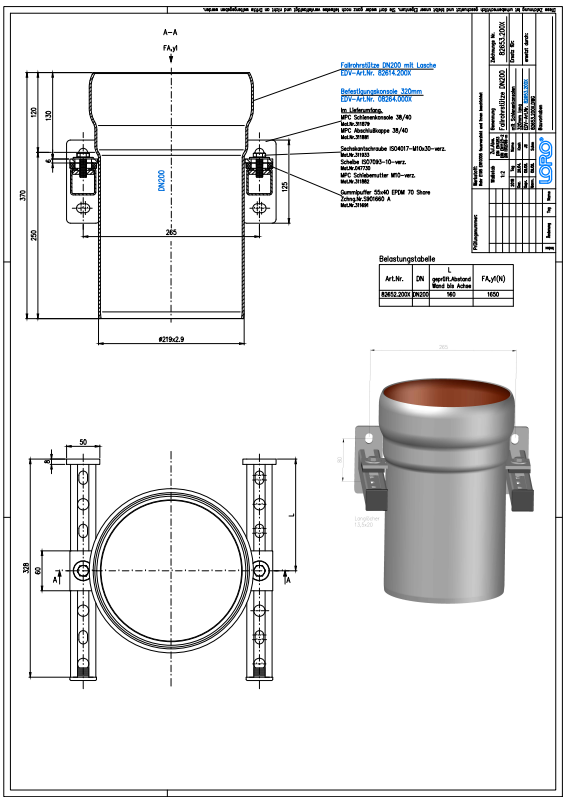

Artikeldata

EAN-kod	**4038088101933**
ETIM-klass	**EC003159**
Nominell diameter	**DN 200**
Yttermått (HxBxL)	**370 x 315 x 333 mm**
Vikt	**8,40 Kg (STK)**
Produktgrupp	**1**
Tullnummer	**73089098**
Material / Färg	**Stahl feuerverzinkt, Silber**

Användningsanvisning

kein Verwendungshinweis notwendig

Nedladdningar

Alles online

Måttritning (PDF)
Broschyr (PDF)
CAD 2D (DXF)
CAD 3D (DWG)
BIM 3D (STEP)
BIM 3D (IFC)