LX-FALLROHRSTÜTZE M.BEFESTIGUNGSKONSOLE

LORO-X downpipe support with fixing bracket and sound insulation DN 150

Descrizione

LORO-X down pipe support with mounting bracket 240mm and sound insulation, in accordance with DIN EN 1123 with raised quality standard, with 2-chamber push-fit socket connection, building material class A1, dimensionally stable, break-proof, backflow-safe, long-life inside coating according to DIN EN ISO 2178 on the basis of a 2-component epoxy combination, colour: red-brown, with clamping ring, DN150

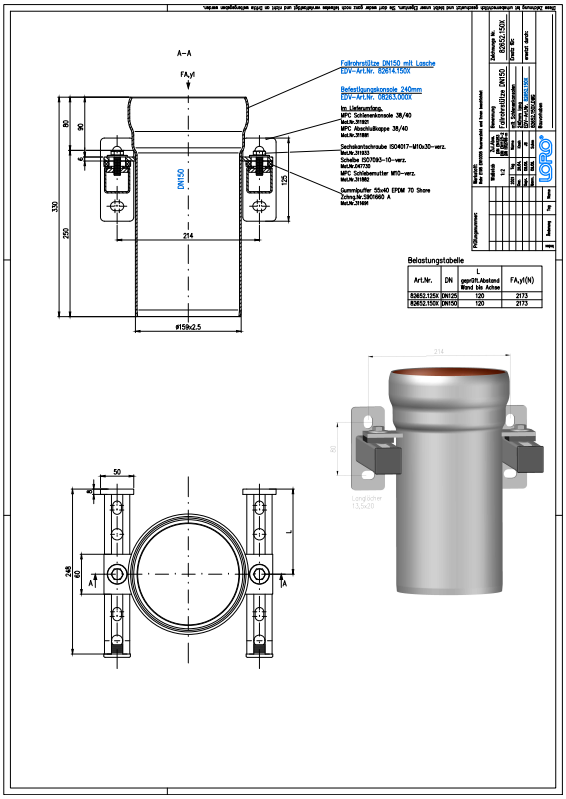

Dati articolo

Codice EAN	**4038088091715**
Classe ETIM	**EC003159**
Diametro nominale	**DN 150**
Misure esterne (AxLxP)	**181 x 250 x 330 mm**
Peso	**5,20 Kg (STK)**
Gruppo prodotti	**1**
Numero tariffa doganale	**73089098**
Materiale / Colore	**Stahl feuerverzinkt, Silber**

Note d'uso

kein Verwendungshinweis notwendig

Download

Alles online

Disegno dimensionale (PDF)
Brochure (PDF)
CAD 2D (DXF)
CAD 3D (DWG)
BIM 3D (STEP)
BIM 3D (IFC)