LX-FALLROHRSTÜTZE M.BEFESTIGUNGSKONSOLE

LORO-X downpipe support with fastening bracket and sound insulation DN 125

Opis

LORO-X down pipe support with mounting bracket 240mm and sound insulation, in accordance with DIN EN 1123 with raised quality standard, with 2-chamber push-fit socket connection, building material class A1, dimensionally stable, break-proof, backflow-safe, long-life inside coating according to DIN EN ISO 2178 on the basis of a 2-component epoxy combination, colour: red-brown, with clamping ring, DN125

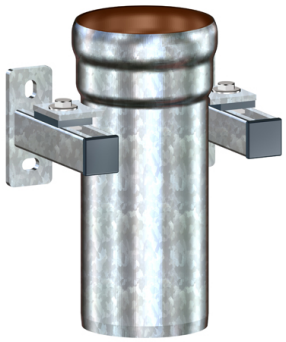

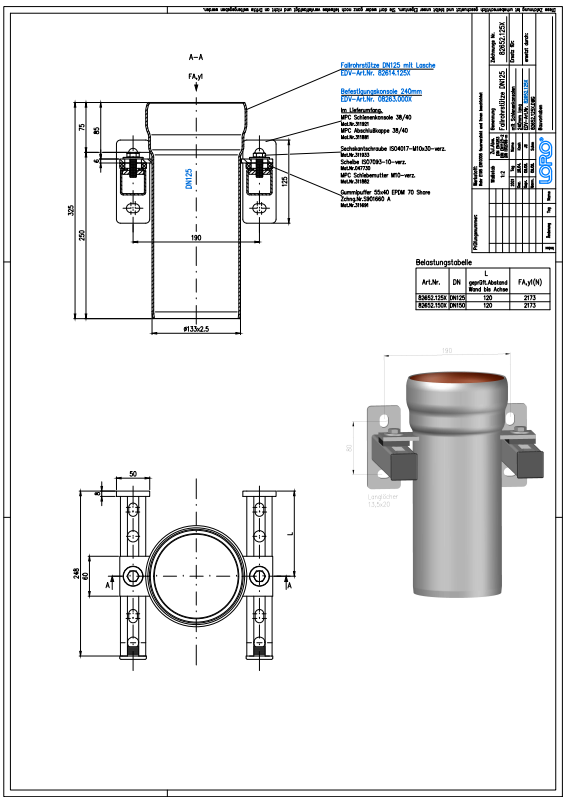

Podatki o izdelku

EAN koda	**4038088091708**
ETIM razred	**EC003159**
Nazivni premer	**DN 125**
Zunanje mere (VxŠxD)	**152 x 230 x 325 mm**
Teža	**5,20 Kg (STK)**
Skupina izdelkov	**1**
Carinska tarifna številka	**73089098**
Material / Barva	**Stahl feuerverzinkt, Silber**

Opomba za uporabo

kein Verwendungshinweis notwendig

Prenosi

Alles online

Merska risba (PDF)
CAD 3D (DWG)
Prospekt (PDF)
BIM 3D (STEP)
CAD 2D (DXF)
BIM 3D (IFC)