LORO-X DOWN PIPE SUPPORTS DN 70

LORO-X downpipe support with flange and sound insulation DN 70

Descriere

LORO-X downpipe support in accordance with DIN EN 1123 with raised quality standard, with 2-chamber push-fit socket connection, building material class A1, dimensionally stable, break-proof, backflow-safe, long-life inside coating according to DIN EN ISO 2178 on the basis of a 2-component epoxy combination, colour: red-brown, with clamping ring, DN70

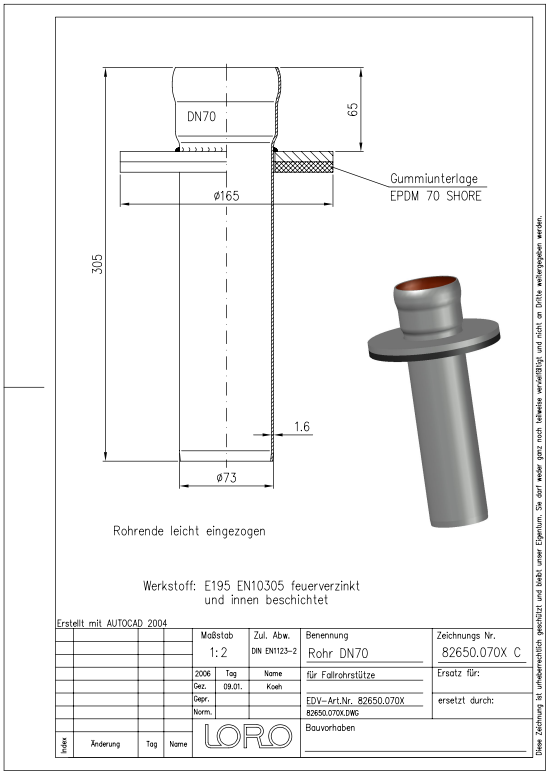

Date articol

Cod EAN	**4038088076743**
Clasă ETIM	**EC011386**
Diametru nominal	**DN 70**
Dimensiuni exterioare (ÎxLxA)	**125 x 125 x 305 mm**
Greutate	**2,30 Kg (STK)**
Grupă de produse	**1**
Număr tarif vamal	**73089098**
Material / Culoare	**Stahl feuerverzinkt, Silber**

Notă de utilizare

kein Verwendungshinweis notwendig

Descărcări

Alles online

Instructiuni de montaj (PDF)
Certificat (PDF)
BIM 3D (STEP)
Desen CAD (PDF)
CAD 2D (DXF)
BIM 3D (IFC)
Broșură (PDF)
CAD 3D (DWG)