LORO-X COMPOSITE BEND 30 DEGREE DN 125

LORO-Composite Pipe bend 30 degrees DN 125

Descripción

LORO-X compound pipe bend consisting of inner pipe (LORO-X pipe, made of steel, hot-dip galvanized, according to DIN EN 1123, with raised quality standard, with 2-chamber push-fit socket connection, building material class A1, dimensionally stable, break-proof, backflow-safe, long-life inside coating according to DIN EN ISO 2178 on the basis of a 2-component epoxy combination, colour: red-brown), insulation layer (PU hard foam B2, CFC-free) and outer pipe (LORO-X pipe, hot-dip galvanized), 30 degrees, DN125

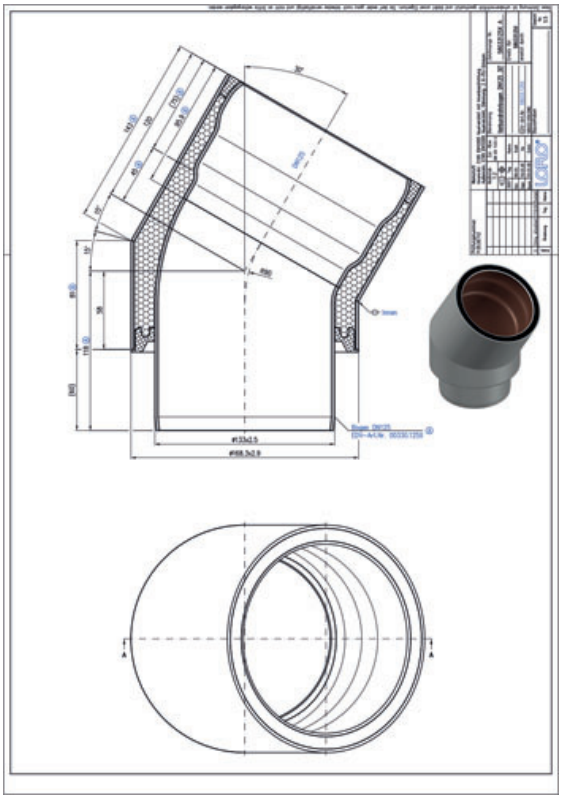

Datos del artículo

Código EAN	4038088025215
Clase ETIM	EC003024
Diámetro nominal	DN 125
Longitud/grado nominal	30
Medidas exteriores (AxAxL)	168 x 217 x 264 mm
Peso	5,50 Kg (STK)
Grupo de productos	3
Número de arancel aduanero	73089098
Material / Color	Stahl feuerverzinkt, Silber

Nota de uso

Doppelwandiges Abflußrohr, DN 40 - DN 150 bestend aus: Innenrohr aus LORO-X Stahlabflußrohr, PU-Däammschicht Baustoffklasse B2, FCKW-frei. Außenrohr aus LORO-X Stahlabflußrohr

Descargas

Alles online

Instrucciones de instalación (PDF)
CAD 2D (DXF)
BIM IFC4 (parametrisch)
Dibujo dimensional (PDF)
CAD 3D (DWG)
BIM 3D (IFC)
Folleto (PDF)
BIM 3D (STEP)