LORO-X COMPOSITE BEND 30 DEGREE DN 125

LORO-Composite Pipe bend 30 degrees DN 125

Beskrivelse

LORO-X compound pipe bend consisting of inner pipe (LORO-X pipe, made of steel, hot-dip galvanized, according to DIN EN 1123, with raised quality standard, with 2-chamber push-fit socket connection, building material class A1, dimensionally stable, break-proof, backflow-safe, long-life inside coating according to DIN EN ISO 2178 on the basis of a 2-component epoxy combination, colour: red-brown), insulation layer (PU hard foam B2, CFC-free) and outer pipe (LORO-X pipe, hot-dip galvanized), 30 degrees, DN125

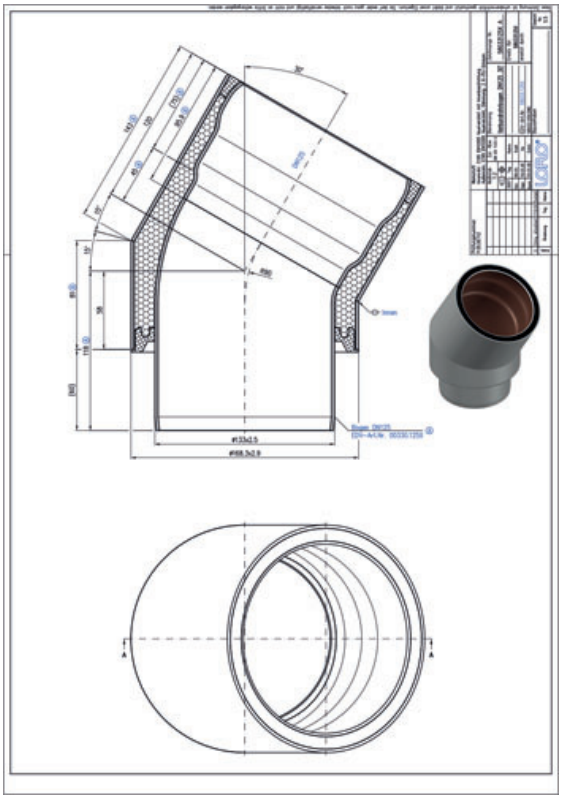

Artikeldata

EAN-kode	4038088025215
ETIM Klasse	EC003024
Nominel diameter	DN 125
Nominel længde/grad	30
Ydermål (HxBxL)	168 x 217 x 264 mm
Vægt	5,50 Kg (STK)
Produktgruppe	3
Toldtarifnummer	73089098
Materiale / Farve	Stahl feuerverzinkt, Silber

Brugsanvisning

Doppelwandiges Abflußrohr, DN 40 - DN 150 bestend aus: Innenrohr aus LORO-X Stahlabflußrohr, PU-Däammschicht Baustoffklasse B2, FCKW-frei. Außenrohr aus LORO-X Stahlabflußrohr

Downloads

Installationsvejledning (PDF)
Måltegning (PDF)
Brochure (PDF)
CAD 2D (DXF)
CAD 3D (DWG)
BIM 3D (STEP)
BIM IFC4 (parametrisch)
BIM 3D (IFC)

Alles online