LORO-X COMPOSITE REDUCED BRANCH 88 DEGREE DN 100/70

LORO-Composite Pipe Red. branch 87 degrees DN 100/70

Description

LORO-X compound pipe reducing branch consisting of inner pipe (LORO-X pipe, made of steel, hot-dip galvanized, according to DIN EN 1123, with raised quality standard, with 2-chamber push-fit socket connection, building material class A1, dimensionally stable, break-proof, backflow-safe, long-life inside coating according to DIN EN ISO 2178 on the basis of a 2-component epoxy combination, colour: red-brown), insulation layer (PU hard foam B2, CFC-free) and outer pipe (LORO-X pipe, hot-dip galvanized), 87 degrees, DN100/70

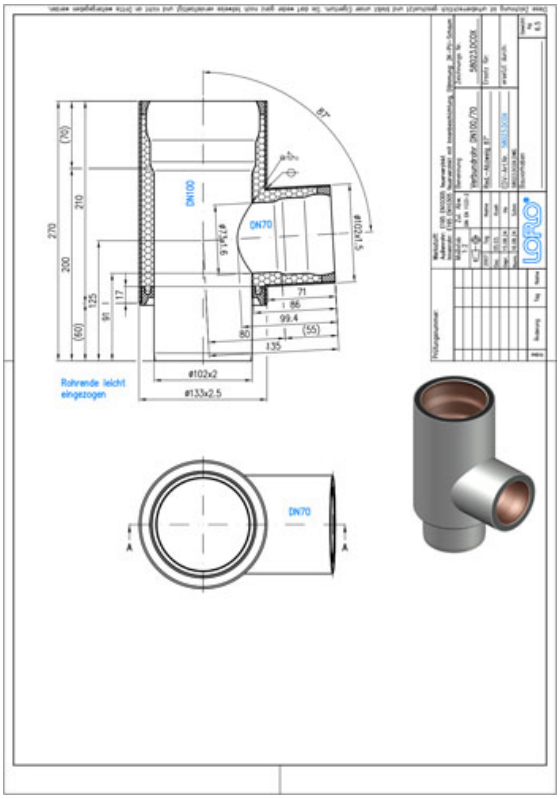

Données de l'article

Code EAN	4038088024973
Classe ETIM	EC003025
Diamètre nominal	DN 100, DN 70
Longueur/degré nominal	88
Dimensions extérieures (HxLxP)	133 x 204 x 270 mm
Poids	6,50 Kg (STK)
Groupe de produits	3
Numéro tarifaire douanier	73089098
Matériau / Couleur	Stahl feuerverzinkt, Silber

Note d'utilisation

Doppelwandiges Abflußrohr, DN 40 - DN 150 bestend aus: Innenrohr aus LORO-X Stahlabflußrohr, PU-Däammschicht Baustoffklasse B2, FCKW-frei. Außenrohr aus LORO-X Stahlabflußrohr

Téléchargements

Alles online

Notice d'installation (PDF)
Dessin dimensionnel (PDF)
Brochure (PDF)
CAD 2D (DXF)
CAD 3D (DWG)
BIM 3D (STEP)
BIM 3D (IFC)