Produktdatablad

LORO_Produkt-Datenblatt_41410.100X_no.pdf
Artikkel 41410.100X
29.11.2026, 20:43

LORO-DL HPT.ABL.KLEMMFL.SENKR.1-TLG.O.WD

LORO-DRAINLET main drain clamping flange vertical one-piece without insulation with retention pipe according to specification

Beskrivelsestekst

LORO-X DRAINLET flat roof drain for overload-free main drainage, please contact LOROWERK for the determination of the necessary retention openings for the main drainage and variable-height retention pipe, series 84(DL) one piece without thermal insulation, vertical pipe, for main drainage with gravity flow, discharge rate max. 4.5 l/s with a water height of up to 75 mm on the roof, with clamping flange as loose and fixed flange construction, for bitumen and plastic roofing sheets, DRAINLET hood made of stainless steel, according to DIN EN 1253, proof of performance according to LX-specification sheet LX1871, made of stainless steel, DN100

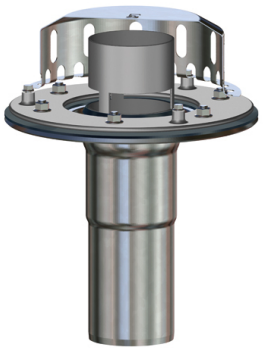

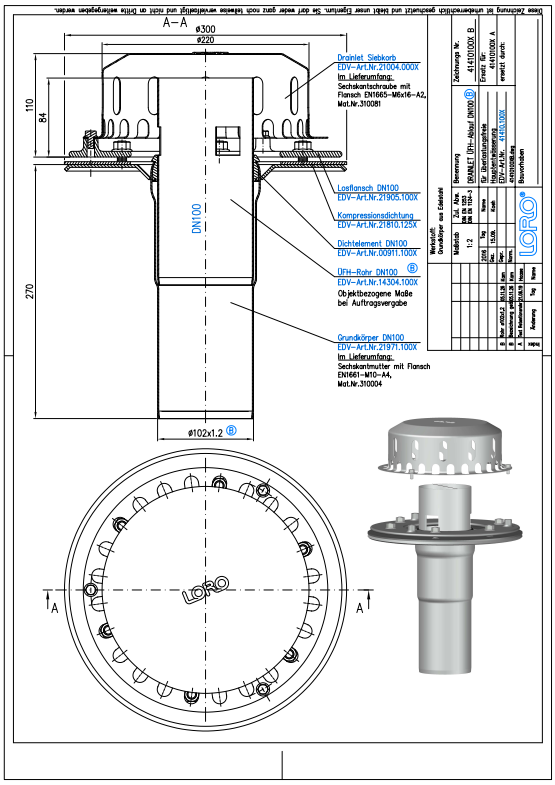

Artikkeldata

EAN-kode	**4038088100394**
ETIM-klasse	**EC011398**
Nominell diameter	**DN 100**
Utvendige mål (HxBxL)	**390 x 300 x 300 mm**
Vekt	**4,80 Kg (STK)**
Produktgruppe	**9**
Tolltariffnummer	**73072980**
Materiale / Farge	**Edelstahl, Silber**

Bruksanvisning

kein Verwendungshinweis notwendig

Nedlastinger

Alles online

Måltegning (PDF)
CAD 2D (DXF)
BIM 3D (IFC)
Brosjyre (PDF)
CAD 3D (DWG)
Systemdatablad LX 1871
BIM 3D (STEP)