LORO-DL GRUNDEINH.F.NOTENTW.M.KLEMMFL.

LORO-DRAINLET Basic unit for emergency drainage with lateral clamping flange without insulation Height 35 mm DN 100

Description

LORO-DRAINLET flat roof drain base unit for gravity flow, according to DIN EN 1253 with raised quality standard, weir height 35 mm, with clamping flange, as loose and fixed flange construction, made of stainless steel, lateral outlet 3 degrees, without thermal insulation, one-piece, consisting of drain pot, loose flange with weir element, including compression seals, DN100

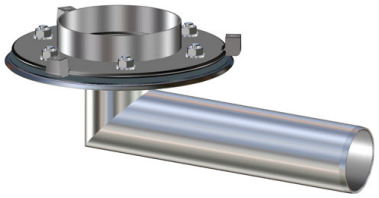

Article information

EAN Code	4038088097717
ETIM Class	EC011398
Nominal diameter	DN 100
Weight	3,90 Kg (STK)
Product group	4
Customs tariff number	73072980
Material / Color	Edelstahl, Silber

Usage note

kein Verwendungshinweis notwendig

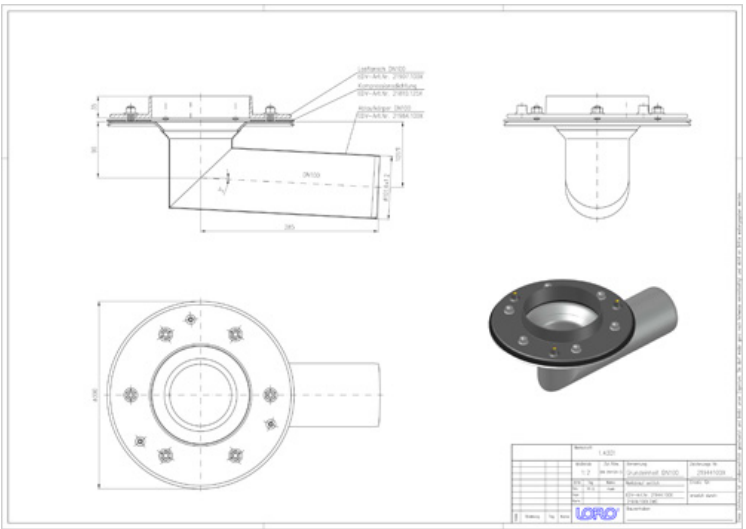

Downloads

CAD drawing (PDF)
CAD 2D (DXF)
CAD 3D (DWG)
BIM 3D (STEP)
BIM 3D (IFC)

Alles online