LORO-DJ GRUNDEINHEIT.F.NOTENTW.M.KLEMMFL

LORO-DRAINJET basic unit for emergency drainage with lateral clamping flange without heat insulation DN 100

Description

LORO-DRAINJET flat roof drain base unit for siphonic flow, according to DIN EN 1253 with raised quality standard, weir height 55 mm, with clamping flange, as loose and fixed flange construction, made of stainless steel, lateral outlet 3 degrees, without thermal insulation, one-piece, consisting of drain pot, loose flange with weir element, including compression seals, DN100

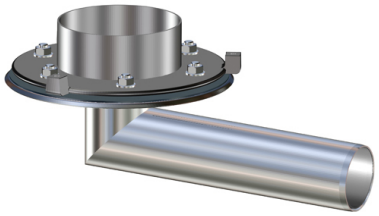

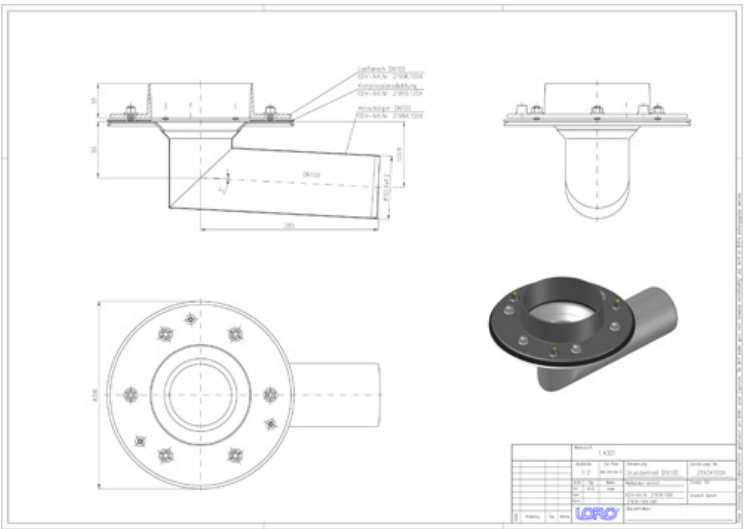

Article information

EAN Code	4038088096482
ETIM Class	EC010400
Nominal diameter	DN 100
Outside measurements (HxWxL)	438 x 300 x 217 mm
Weight	4,00 Kg (STK)
Product group	4
Customs tariff number	73072980
Material / Color	Edelstahl, Silber

Usage note

kein Verwendungshinweis notwendig

Downloads

Alles online

CAD drawing (PDF)
CAD 3D (DWG)
Brochure (PDF)
BIM 3D (STEP)
CAD 2D (DXF)
BIM 3D (IFC)