LORO-DL GRUNDEINH.EDELST.KLEMMFL.SEITL.

LORO-DRAINLET basic unit made of stainless steel with lateral clamping flange with water insulation DN 125

Description

LORO-DRAINLET flat roof drain base unit for gravity flow, according to DIN EN 1253 with raised quality standard, with clamping flange, as loose and fixed flange construction, made of stainless steel, lateral outlet, with thermal insulation, one-piece, consisting of drain pot, loose flange, including compression seals, DN125

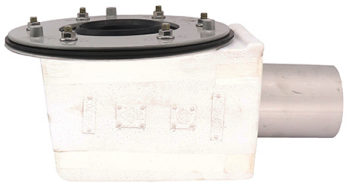

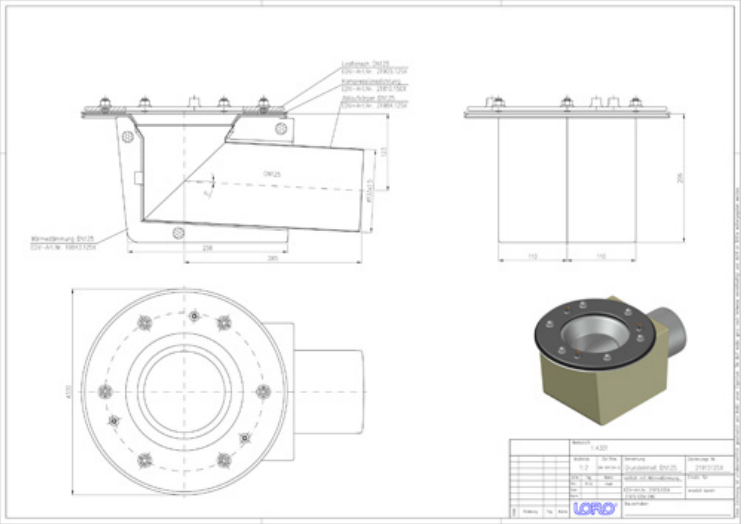

Article information

EAN Code	4038088075043
ETIM Class	EC011350
Nominal diameter	DN 125
Outside measurements (HxWxL)	330 x 453 x 232 mm
Weight	4,80 Kg (STK)
Product group	4
Customs tariff number	73072980
Material / Color	Edelstahl, Silber

Usage note

kein Verwendungshinweis notwendig

Downloads

Alles online

Installation (PDF)
Certificate (PDF)
BIM 3D (STEP)
CAD drawing (PDF)
CAD 2D (DXF)
BIM 3D (IFC)
Brochure (PDF)
CAD 3D (DWG)