LORO-ROHRDURCHF.M.AUFK.EINTLG.MIT WÄRMED

LORO pipe penetration with upstand, one-piece with heat insulation, vertical with clamping flange for plastic DN 150

Beskrivelse

LORO-DRAINLET Downpipe penetration for gravity flow, with upstand, according to DIN EN 1253 with raised quality standard, with clamping flange, as loose and fixed flange construction, for plastic roofing sheets, made of stainless steel, with thermal insulation, DN150

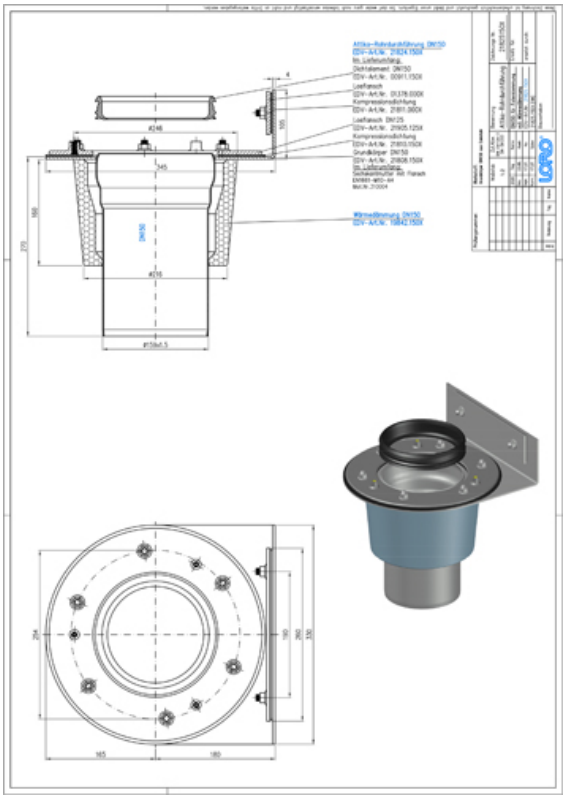

Artikeldata

EAN-kode	4038088096819
ETIM Klasse	EC010599
Nominel diameter	DN 150
Ydermål (HxBxL)	345 x 330 x 371 mm
Vægt	7,80 Kg (STK)
Produktgruppe	4
Toldtarifnummer	73072980
Materiale / Farve	Edelstahl, Silber

Brugsanvisning

kein Verwendungshinweis notwendig

Downloads

Alles online

[Måltegning (PDF)](#) [Brochure (PDF)](#) [CAD 2D (DXF)](#)
[CAD 3D (DWG)](#) [BIM 3D (STEP)](#) [BIM 3D (IFC)](#)