LORO-ROHRDURCHF.M.AUFK.EINTLG.MIT WÄRMED

LORO pipe penetration with upstand, one-piece with heat insulation, vertical with clamping flange for plastic DN 150

Descrição

LORO-DRAINLET Downpipe penetration for gravity flow, with upstand, according to DIN EN 1253 with raised quality standard, with clamping flange, as loose and fixed flange construction, for plastic roofing sheets, made of stainless steel, with thermal insulation, DN150

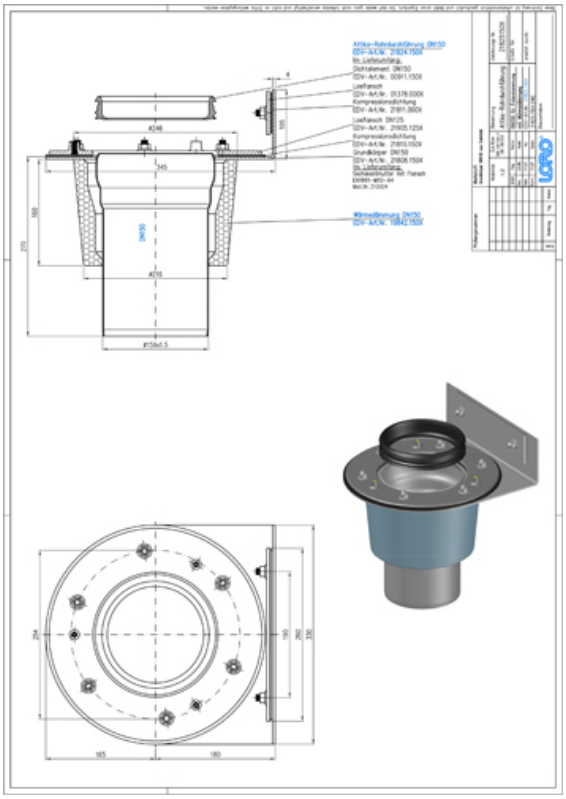

Dados do artigo

Código EAN	4038088096819
Classe ETIM	EC010599
Diâmetro nominal	DN 150
Medidas exteriores (AxLxP)	345 x 330 x 371 mm
Peso	7,80 Kg (STK)
Grupo de produtos	4
Número de pauta aduaneira	73072980
Material / Cor	Edelstahl, Silber

Nota de utilização

kein Verwendungshinweis notwendig

Transferências

Desenho cotado (PDF)
Brochura (PDF)
CAD 2D (DXF)
CAD 3D (DWG)
BIM 3D (STEP)
BIM 3D (IFC)

Alles online