LORO-ROHRDURCHF.M.AUFK.EINTLG.O.WD.SENKR

LORO-pipe penetration with backsplash one-piece without insulation vertical with clamping flange for plastic DN 150

Beschrijving

LORO-DRAINLET Downpipe penetration for gravity flow, with upstand, according to DIN EN 1253 with raised quality standard, with clamping flange, as loose and fixed flange construction, for plastic roofing sheets, made of stainless steel, without thermal insulation, DN150

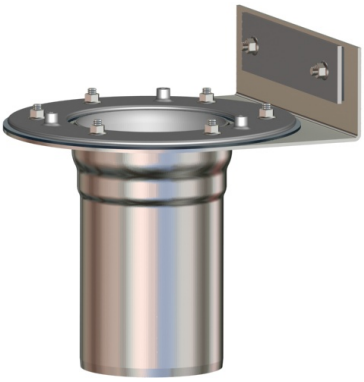

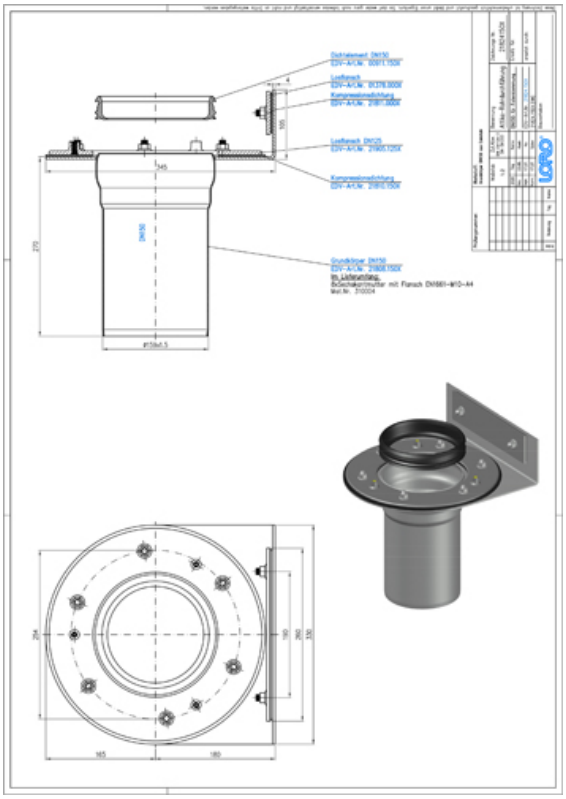

Artikelgegevens

EAN-code	4038088096772
ETIM Klasse	EC011398
Nominale diameter	DN 150
Buitenafmetingen (HxBxL)	345 x 330 x 371 mm
Gewicht	7,70 Kg (STK)
Productgroep	4
Douanetariefnummer	73072980
Materiaal / Kleur	Edelstahl, Silber

Gebruiksaanwijzing

kein Verwendungshinweis notwendig

Downloads

Alles online

Maattekening (PDF)
Brochure (PDF)
CAD 2D (DXF)
CAD 3D (DWG)
BIM 3D (STEP)
BIM 3D (IFC)