LORO-ROHRDURCHF.M.AUFK.EINTLT.MIT WÄRMED

LORO-pipe penetration with upstand, one-piece, with insulation, vertical, with clamping flange for bitumen DN 150

Description

LORO-DRAINLET Downpipe penetration for gravity flow, with upstand, according to DIN EN 1253 with raised quality standard, with clamping flange, as loose and fixed flange construction, for bituminous roofing sheets, made of stainless steel, with thermal insulation, DN150

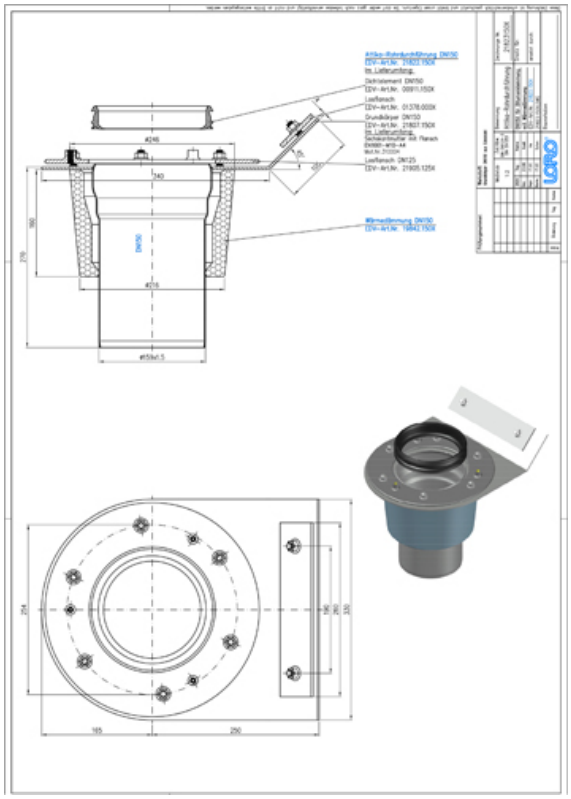

Article information

EAN Code	4038088096734
ETIM Class	EC010599
Nominal diameter	DN 150
Outside measurements (HxWxL)	415 x 330 x 350 mm
Weight	7,50 Kg (STK)
Product group	4
Customs tariff number	73072980
Material / Color	Edelstahl, Silber

Usage note

kein Verwendungshinweis notwendig

Downloads

Alles online

CAD drawing (PDF)
Brochure (PDF)
CAD 2D (DXF)
CAD 3D (DWG)
BIM 3D (STEP)
BIM 3D (IFC)