LORO-ROHRDURCHF.M.AUFK.EINTLG.MIT WÄRMED

LORO-pipe penetration with upstand, one-piece with insulation, vertical with clamping flange for bitumen DN 70

Descrição

LORO-DRAINLET Downpipe penetration for gravity flow, with upstand, according to DIN EN 1253 with raised quality standard, with clamping flange, as loose and fixed flange construction, for bituminous roofing sheets, made of stainless steel, with thermal insulation, DN70

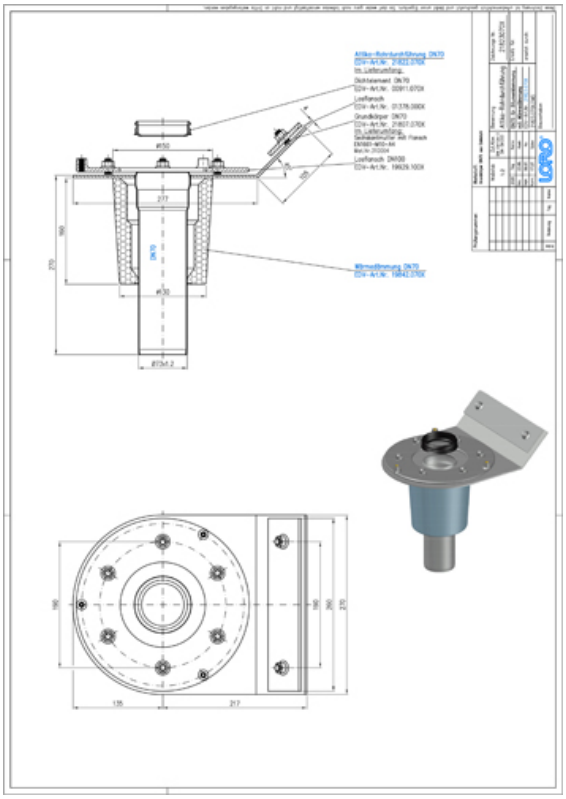

Dados do artigo

Código EAN	4038088096703
Classe ETIM	EC010599
Diâmetro nominal	DN 70
Medidas exteriores (AxLxP)	352 x 270 x 350 mm
Peso	4,70 Kg (STK)
Grupo de produtos	4
Número de pauta aduaneira	73072980
Material / Cor	Edelstahl, Silber

Nota de utilização

kein Verwendungshinweis notwendig

Transferências

Desenho cotado (PDF) · Brochura (PDF) · CAD 2D (DXF)
CAD 3D (DWG) · BIM 3D (STEP) · BIM 3D (IFC)

Alles online