LORO-ROHRDURCHF.M.AUFK.EINTLG.O.WD,SENKR

LORO-pipe penetration with upstand one-piece without insulation vertical with clamping flange for bitumen DN 150

Beskrivning

LORO-DRAINLET Downpipe penetration for gravity flow, with upstand, according to DIN EN 1253 with raised quality standard, with clamping flange, as loose and fixed flange construction, for bituminous roofing sheets, made of stainless steel, without thermal insulation, DN150

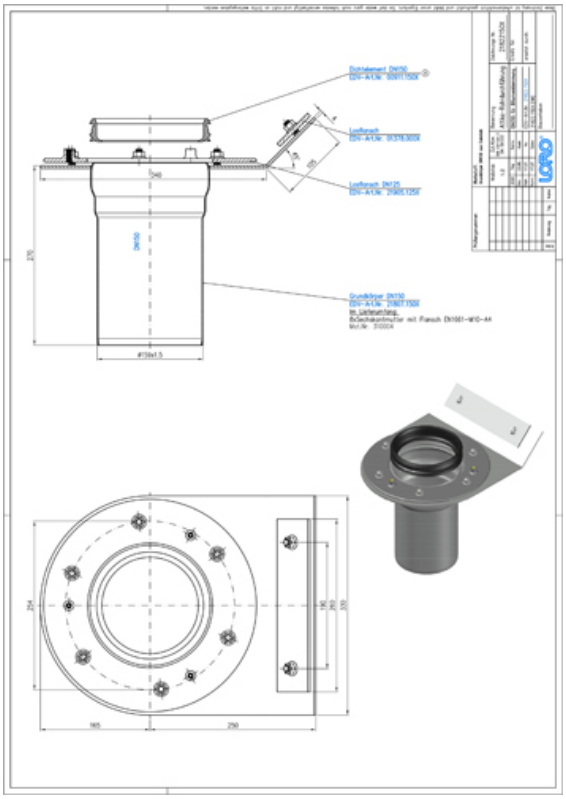

Artikeldata

EAN-kod	4038088096697
ETIM-klass	EC011398
Nominell diameter	DN 150
Yttermått (HxBxL)	415 x 330 x 350 mm
Vikt	7,40 Kg (STK)
Produktgrupp	4
Tullnummer	73072980
Material / Färg	Edelstahl, Silber

Användningsanvisning

kein Verwendungshinweis notwendig

Nedladdningar

Alles online

Måttritning (PDF)
Broschyr (PDF)
CAD 2D (DXF)
CAD 3D (DWG)
BIM 3D (STEP)
BIM 3D (IFC)