LORO-ROHRDURCHF.M.AUFK.EINTLG.O.WD,SENKR

LORO-pipe penetration with upstand one-piece without insulation vertical with clamping flange for bitumen DN 125

Descrizione

LORO-DRAINLET Downpipe penetration for gravity flow, with upstand, according to DIN EN 1253 with raised quality standard, with clamping flange, as loose and fixed flange construction, for bituminous roofing sheets, made of stainless steel, without thermal insulation, DN125

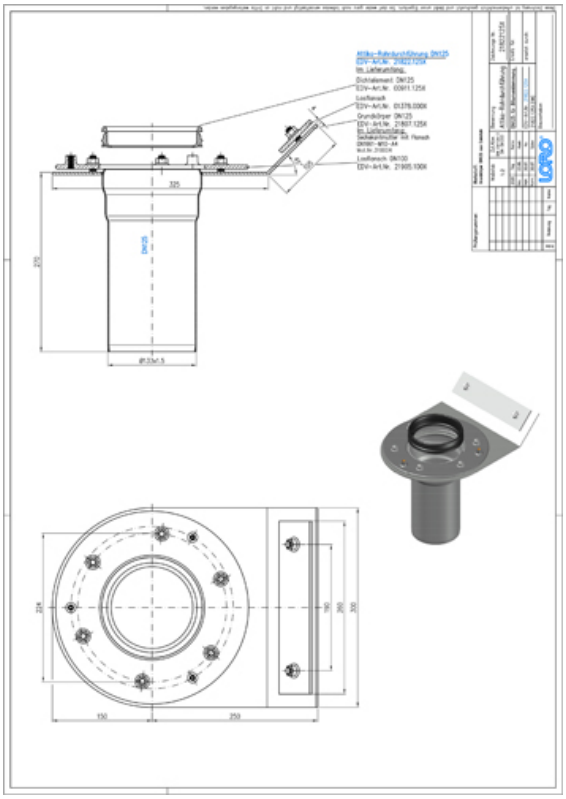

Dati articolo

Codice EAN	4038088096680
Classe ETIM	EC011398
Diametro nominale	DN 125
Misure esterne (AxLxP)	400 x 270 x 350 mm
Peso	6,40 Kg (STK)
Gruppo prodotti	4
Numero tariffa doganale	73072980
Materiale / Colore	Edelstahl, Silber

Note d'uso

kein Verwendungshinweis notwendig

Download

Alles online

Disegno dimensionale (PDF)
Brochure (PDF)
CAD 2D (DXF)
CAD 3D (DWG)
BIM 3D (STEP)
BIM 3D (IFC)