LORO-ROHRDURCHF.M.AUFK.EINTLG.O.WD,SENKR

LORO-pipe penetration with upstand one-piece without insulation vertical with clamping flange for bitumen DN 125

Opis

LORO-DRAINLET Downpipe penetration for gravity flow, with upstand, according to DIN EN 1253 with raised quality standard, with clamping flange, as loose and fixed flange construction, for bituminous roofing sheets, made of stainless steel, without thermal insulation, DN125

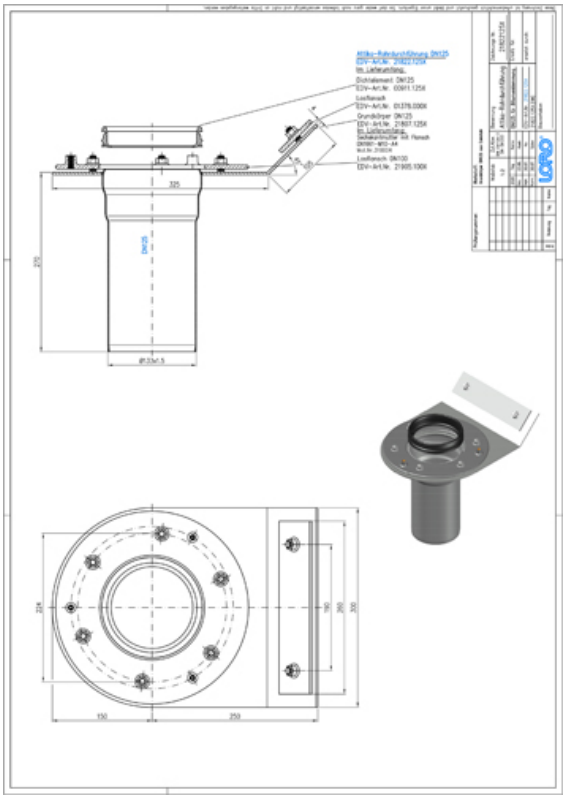

Podatki o izdelku

EAN koda	4038088096680
ETIM razred	EC011398
Nazivni premer	DN 125
Zunanje mere (VxŠxD)	400 x 270 x 350 mm
Teža	6,40 Kg (STK)
Skupina izdelkov	4
Carinska tarifna številka	73072980
Material / Barva	Edelstahl, Silber

Opomba za uporabo

kein Verwendungshinweis notwendig

Prenosi

Alles online

Merska risba (PDF)
CAD 3D (DWG)
Prospekt (PDF)
BIM 3D (STEP)
CAD 2D (DXF)
BIM 3D (IFC)