LORO-ROHRDURCHF.M.AUFK.EINTLG.O.WD,SENKR

LORO-pipe penetration with upstand one-piece without insulation vertical with clamping flange for bitumen DN 125

Описание

LORO-DRAINLET Downpipe penetration for gravity flow, with upstand, according to DIN EN 1253 with raised quality standard, with clamping flange, as loose and fixed flange construction, for bituminous roofing sheets, made of stainless steel, without thermal insulation, DN125

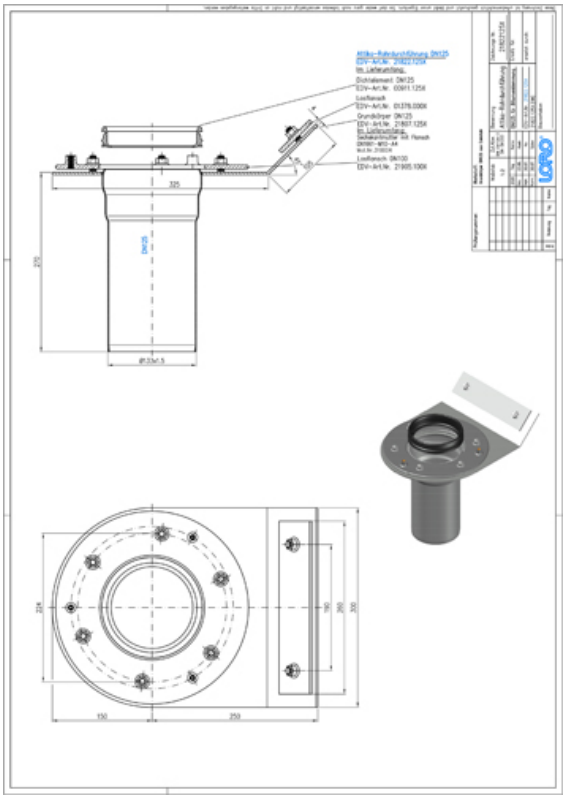

Данни за артикула

EAN код	4038088096680
ETIM клас	EC011398
Номинален диаметър	DN 125
Външни размери (ВхШхД)	400 x 270 x 350 mm
Тегло	6,40 Kg (STK)
Продуктова група	4
Митнически тарифен номер	73072980
Материал / Цвят	Edelstahl, Silber

Забележка за употреба

kein Verwendungshinweis notwendig

Изтегляния

Alles online

CAD чертеж (PDF)
CAD 3D (DWG)
Брошура (PDF)
BIM 3D (STEP)
CAD 2D (DXF)
BIM 3D (IFC)