LORO-ROHRDURCHF.M.AUFK.EINTLG.O.WD,SENKR

LORO-pipe penetration with upstand one-piece without insulation vertical with clamping flange for bitumen DN 125

Description

LORO-DRAINLET Downpipe penetration for gravity flow, with upstand, according to DIN EN 1253 with raised quality standard, with clamping flange, as loose and fixed flange construction, for bituminous roofing sheets, made of stainless steel, without thermal insulation, DN125

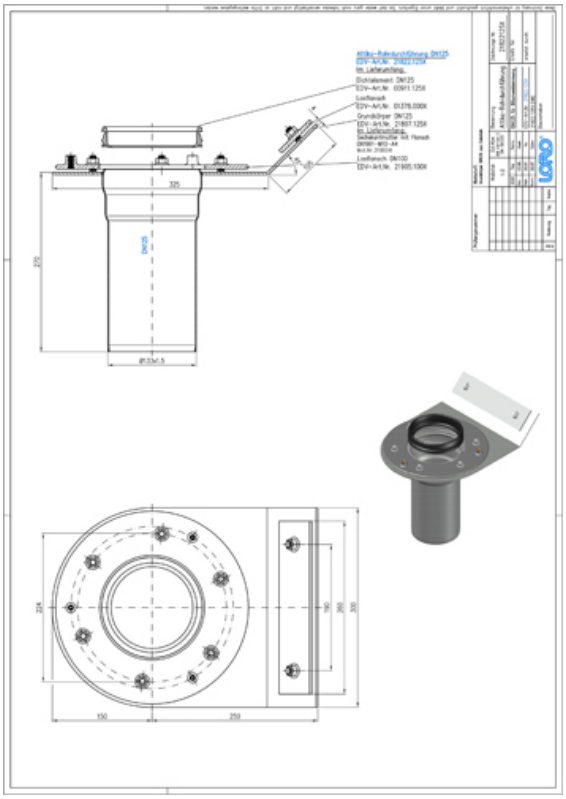

Article information

EAN Code	4038088096680
ETIM Class	EC011398
Nominal diameter	DN 125
Outside measurements (HxWxL)	400 x 270 x 350 mm
Weight	6,40 Kg (STK)
Product group	4
Customs tariff number	73072980
Material / Color	Edelstahl, Silber

Usage note

kein Verwendungshinweis notwendig

Downloads

Alles online

CAD drawing (PDF)
CAD 3D (DWG)
Brochure (PDF)
BIM 3D (STEP)
CAD 2D (DXF)
BIM 3D (IFC)