LORO-ROHRDURCHF.M.AUFK.EINTLG.O.WD,SENKR

LORO-pipe penetration with upstand one-piece without insulation vertical with clamping flange for bitumen DN 100

Beskrivelse

LORO-DRAINLET Downpipe penetration for gravity flow, with upstand, according to DIN EN 1253 with raised quality standard, with clamping flange, as loose and fixed flange construction, for bituminous roofing sheets, made of stainless steel, without thermal insulation, DN100

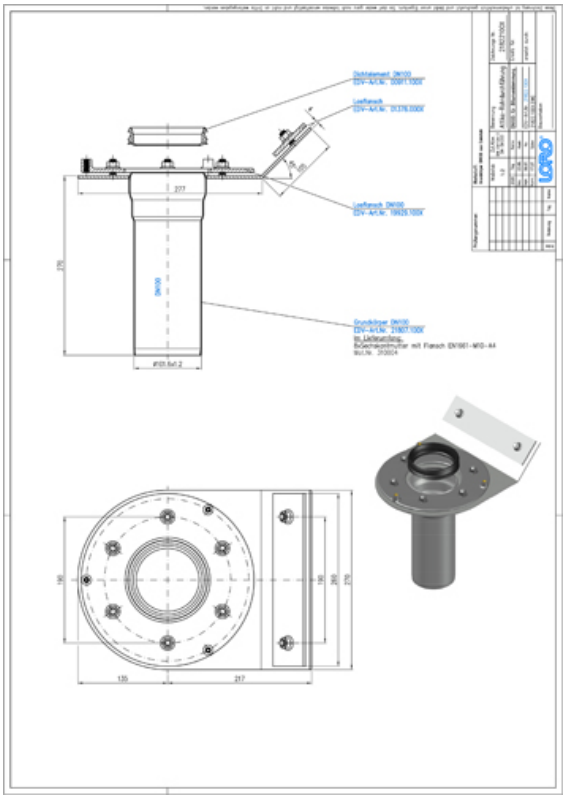

Artikkeldata

EAN-kode	4038088096673
ETIM-klasse	EC011398
Nominell diameter	DN 100
Utvendige mål (HxBxL)	352 x 270 x 350 mm
Vekt	5,00 Kg (STK)
Produktgruppe	4
Tolltariffnummer	73072980
Materiale / Farge	Edelstahl, Silber

Bruksanvisning

kein Verwendungshinweis notwendig

Nedlastinger

Alles online

Måltegning (PDF)
CAD 3D (DWG)
Brosjyre (PDF)
BIM 3D (STEP)
CAD 2D (DXF)
BIM 3D (IFC)