LORO-ROHRDURCHF.M.AUFK.EINTLG.O.WD.SENKR

LORO-pipe penetration with upstand one-piece without insulation vertical with clamping flange for bitumen DN 70

Descriere

LORO-DRAINLET Downpipe penetration for gravity flow, with upstand, according to DIN EN 1253 with raised quality standard, with clamping flange, as loose and fixed flange construction, for bituminous roofing sheets, made of stainless steel, without thermal insulation, DN70

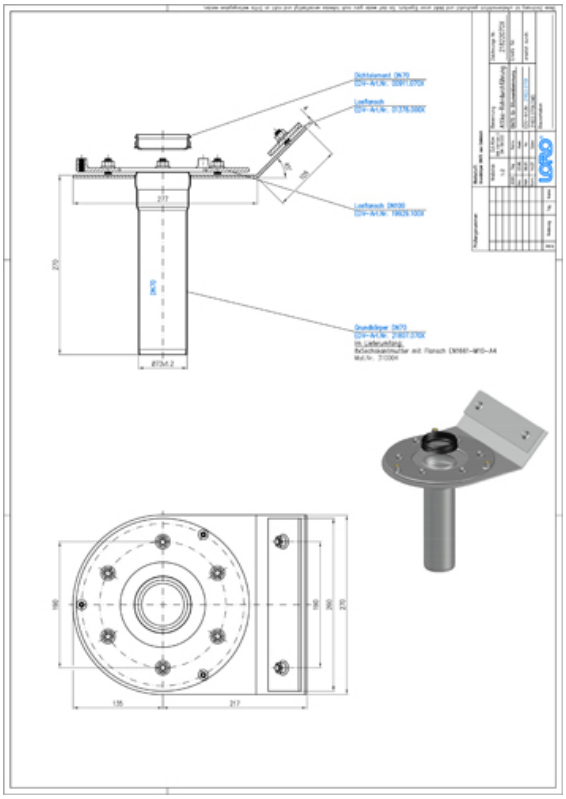

Date articol

Cod EAN	4038088096666
Clasă ETIM	EC011398
Diametru nominal	DN 70
Dimensiuni exterioare (ÎxLxA)	352 x 270 x 350 mm
Greutate	4,70 Kg (STK)
Grupă de produse	4
Număr tarif vamal	73072980
Material / Culoare	Edelstahl, Silber

Notă de utilizare

kein Verwendungshinweis notwendig

Descărcări

Alles online

Desen CAD (PDF)
CAD 3D (DWG)
Broșură (PDF)
BIM 3D (STEP)
CAD 2D (DXF)
BIM 3D (IFC)