LORO-KOMPRESSIONSDICHTUNG NBR P 559 2MM,

LORO compression gasket NBR P 559 fr LOROFLEX sliding flange

Beskrivelse

LORO-X compression sealing NBR for sliding flange of the LOROFLEX flat roof penetrations with inner pipe DN125 and outer pipe DN150. When using vapour barrier sheets or roofing sheets made of plastic please separately order 2 compression seals per flange connection.

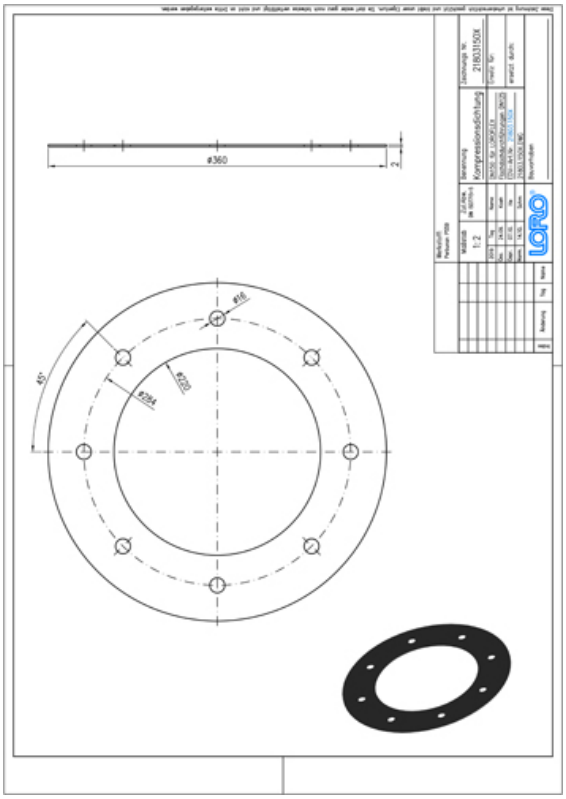

Artikkeldata

EAN-kode	4038088101650
ETIM-klasse	EC001181
Nominell diameter	DN 150
Utvendige mål (HxBxL)	360 x 360 x 2 mm
Vekt	0,16 Kg (STK)
Produktgruppe	4
Tolltariffnummer	40169997
Materiale / Farge	Perbunan P559, Schwarz

Bruksanvisning

kein Verwendungshinweis notwendig

Nedlastinger

Alles online

Monteringsanvisning (PDF)
CAD 2D (DXF)
BIM 3D (IFC)
Måltegning (PDF)
CAD 3D (DWG)
Brosjyre (PDF)
BIM 3D (STEP)