LORO-DL MINI ABLAUF,KLEMMFL.1-TLG.O.WD.

LORO-DRAINLET Mini drain clamping flange one-piece without external insulation for box drain DN 70

Beskrivelsestekst

LORO-X DRAINLET-Mini, series 84(DL), one-piece, vertical outlet, for main drainage with gravity flow, discharge rate 2.5 l/s at 35 mm water level on the roof, with clamping flange as loose and fixed flange construction including compression seals, DRAINLET-Mini hood made of stainless steel, according to DIN EN 1253 with raised quality standard, proof of performance with standard-compliant testing system with 4.2 m non-ventilated downpipe according to LX specification sheet LX3045, made of stainless steel, DN70



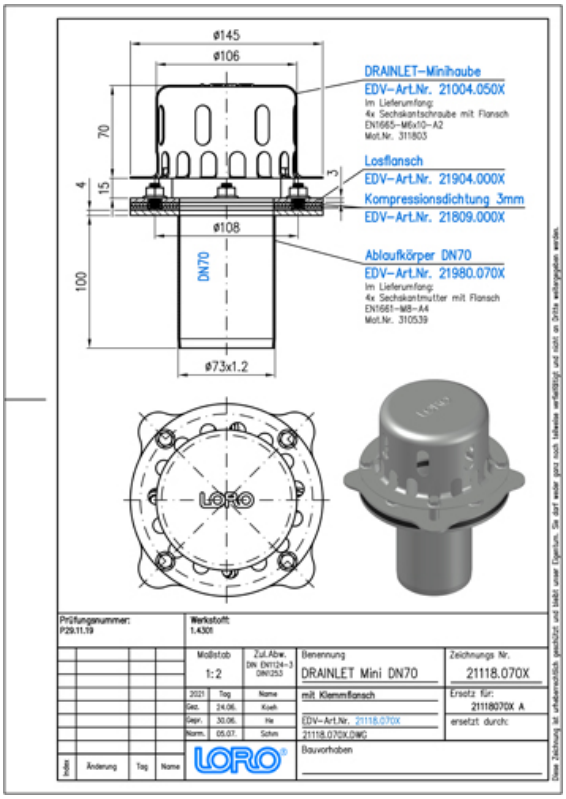

Artikkeldata

EAN-kode	**4038088104316**
ETIM-klasse	**EC011398**
Nominell diameter	**DN 70**
Utvendige mål (HxBxL)	**199 x 175 x 175 mm**
Vekt	**1,20 Kg (STK)**
Produktgruppe	**4**
Tolltariffnummer	**73072980**
Materiale / Farge	**Edelstahl, Silber**

Bruksanvisning

Der LORO-X DRAINLET Mini zeichnet sich durch platzsparende Maße (145 mm Flanschdurchmesser) aus und eignet sich daher z.B. für Kastenrinnen, Carports und kleine Dachflächen. Einsatzgebiete Kastenrinnen ab 150 mm Breite, Gesimsrinnen, Garagen, Carports, Fertiggaragen, Vordächer, kleine Dachflächen.

Nedlastinger

Alles online

Monteringsanvisning (PDF)
Godkjenning (PDF)
CAD 3D (DWG)
Måltegning (PDF)
Systemdatablad LX 3045
BIM 3D (STEP)
Brosjyre (PDF)
CAD 2D (DXF)
BIM 3D (IFC)