LORO-DL MINI ABLAUF,KLEMMFL.1-TLG.O.WD.

LORO-DRAINLET Mini drain clamp flange one-piece without insulation for box drain DN 50

Beskrivelsestekst

LORO-X DRAINLET-Mini, series 84(DL), one-piece, vertical outlet, for main drainage with gravity flow, discharge rate 2.7 l/s at 35 mm water level on the roof, with clamping flange as loose and fixed flange construction including compression seals, DRAINLET-Mini hood made of stainless steel, according to DIN EN 1253 with raised quality standard, proof of performance with standard-compliant testing system with 4.2 m non-ventilated downpipe according to LX specification sheet LX1391, made of stainless steel, DN50



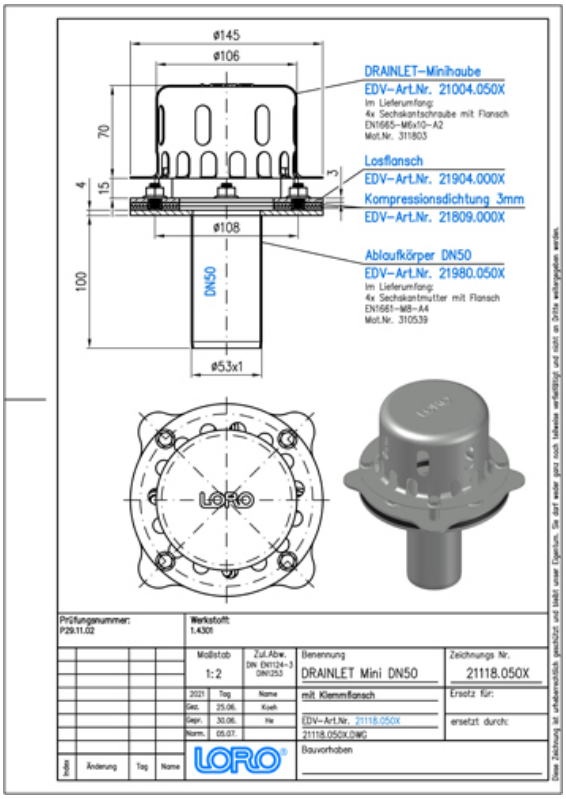

Artikkeldata

EAN-kode	**4038088095270**
ETIM-klasse	**EC011398**
Nominell diameter	**DN 50**
Utvendige mål (HxBxL)	**199 x 175 x 175 mm**
Vekt	**1,20 Kg (STK)**
Produktgruppe	**4**
Tolltariffnummer	**73072980**
Materiale / Farge	**Edelstahl, Silber**

Bruksanvisning

Der LORO-X DRAINLET Mini zeichnet sich durch platzsparende Maße (145 mm Flanschdurchmesser) aus und eignet sich daher z.B. für Kastenrinnen, Carports und kleine Dachflächen. Einsatzgebiete: Kastenrinnen ab 150 mm Breite, Gesimsrinnen, Garagen, Carports, Fertiggaragen, Vordächer, kleine Dachflächen.

Nedlastinger

Alles online

Monteringsanvisning (PDF)
Godkjenning (PDF)
CAD 2D (DXF)
BIM 3D (IFC)
Måltegning (PDF)
Systemdatablad LX 1391
CAD 3D (DWG)
Brosjyre (PDF)
Systemdatablad LX 1641
BIM 3D (STEP)