LORO-VERSAL-NOT-ABL.DRUCKST.F.UMKEHRD.M.

LORO-VERSAL Emergency drain for pressure flow for inverted roof with clamping flange sieve unit 495 mm DN 70

Opis

LORO-VERSAL emergency drain base unit for inverted roof, for siphonic flow with planned completely filled pipe, according to DIN EN 1253 with raised quality standard, with clamping flange as fixed and loose flange construction, made of stainless steel, with thermal insulation, consisting of drain pot, air strainer and loose flange, pitot pipe and strainer unit for inverted roof, for installation height 495 mm, consisting of strainer basket and strainer cover, made of stainless steel, DN70

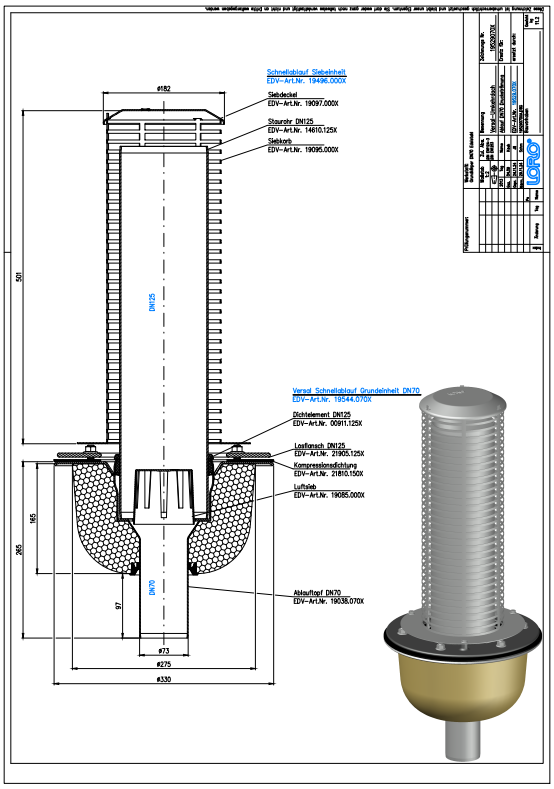

Podatki o izdelku

EAN koda	4038088093863
ETIM razred	EC011398
Nazivni premer	DN 70
Zunanje mere (VxŠxD)	330 x 330 x 793 mm
Teža	10,00 Kg (STK)
Skupina izdelkov	4
Carinska tarifna številka	73089098
Material / Barva	Edelstahl, Silber

Opomba za uporabo

kein Verwendungshinweis notwendig

Prenosi

Alles online

Merska risba (PDF)
Prospekt (PDF)
Certifikat (PDF)
CAD 2D (DXF)
CAD 3D (DWG)
BIM 3D (STEP)
BIM 3D (IFC)