FLACHDACHDURCHFÜHRUNG F.WU-BETON M.WD.U.

Flat roof duct for waterproof concrete with heat insulation and locking flange 310 mm DN 125

Opis

LORO-X roof drain and slab penetration with blocking flange for waterproof concrete, media-carrying, made of steel, hot-dip galvanized, long-life inside coating according to DIN EN ISO 2178 on the basis of a 2-component epoxy combination, colour: red-brown, length 310 mm, DN125

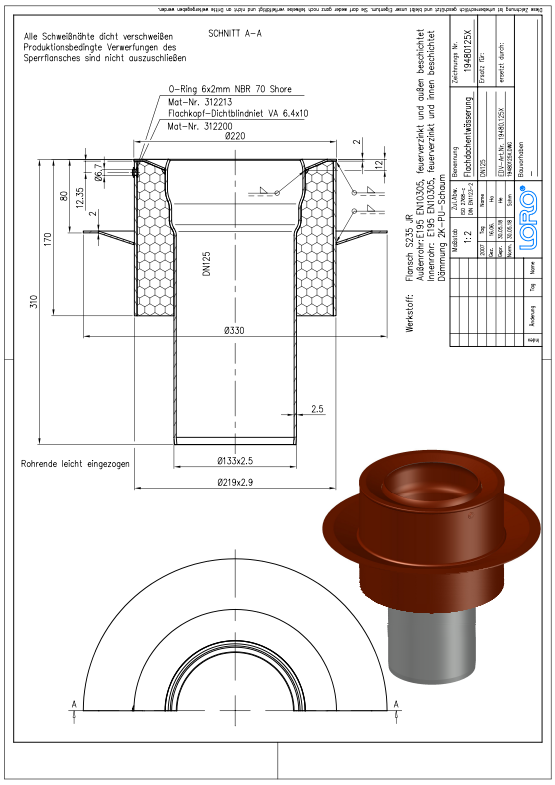

Podaci o artiklu

EAN kod	4038088074015
ETIM klasa	EC010599
Nazivni promjer	DN 125
Vanjske mjere (VxŠxD)	330 x 330 x 310 mm
Težina	6,90 Kg (STK)
Grupa proizvoda	9
Carinski tarifni broj	73089098
Materijal / Boja	Stahl feuerverzinkt, Silber

Napomena za upotrebu

kein Verwendungshinweis notwendig

Preuzimanja

Alles online

Dimenzijski crtež (PDF)
Prospekt (PDF)
CAD 2D (DXF)
CAD 3D (DWG)
BIM 3D (STEP)
BIM 3D (IFC)