LORO-VERSAL BALKONABL.GRUNDEINH.3 GR.O.W

LORO-VERSAL balcony drain basic unit 3 degrees without heat insulation made of stainless steel DN 50

Beskrivning

LORO-VERSAL balcony drain base unit with clamping flange, series K, according to DIN EN 1253 with raised quality standard, made of stainless steel, outlet 3 degrees, without thermal insulation, consisting of drain pot, flange sealing ring, loose flange, DN50

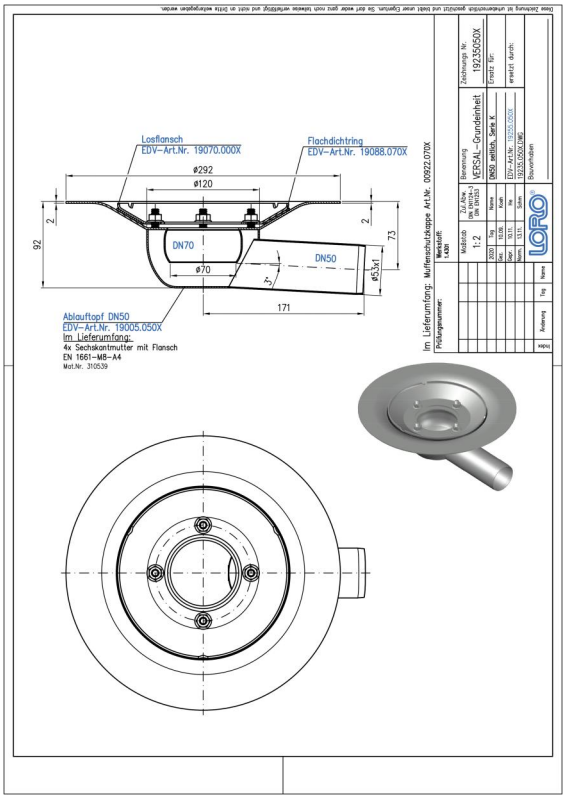

Artikeldata

EAN-kod	4038088040508
ETIM-klass	EC011398
Nominell diameter	DN 50
Yttermått (HxBxL)	292 x 319 x 99 mm
Vikt	2,40 Kg (STK)
Produktgrupp	4
Tullnummer	73072980
Material / Färg	Edelstahl, Silber

Användningsanvisning

kein Verwendungshinweis notwendig

Nedladdningar

Alles online

[Monteringsanvisning (PDF)](#)
[Godkännande (PDF)](#)
[CAD 3D (DWG)](#)
[Måttritning (PDF)](#)
[Aufbauschema (PDF)](#)
[BIM 3D (STEP)](#)
[Broschyr (PDF)](#)
[CAD 2D (DXF)](#)
[BIM 3D (IFC)](#)