LORO-VERSAL BALKONABL.GRUNDEINH.SENKR.M.

LORO-VERSAL balcony drain basic unit vertical with insulation made of stainless steel DN 50

Beskrivelse

LORO-VERSAL balcony drain base unit with clamping flange, series K, according to DIN EN 1253 with raised quality standard, made of stainless steel, vertical outlet, with thermal insulation, consisting of drain pot, flange sealing ring, loose flange, DN50

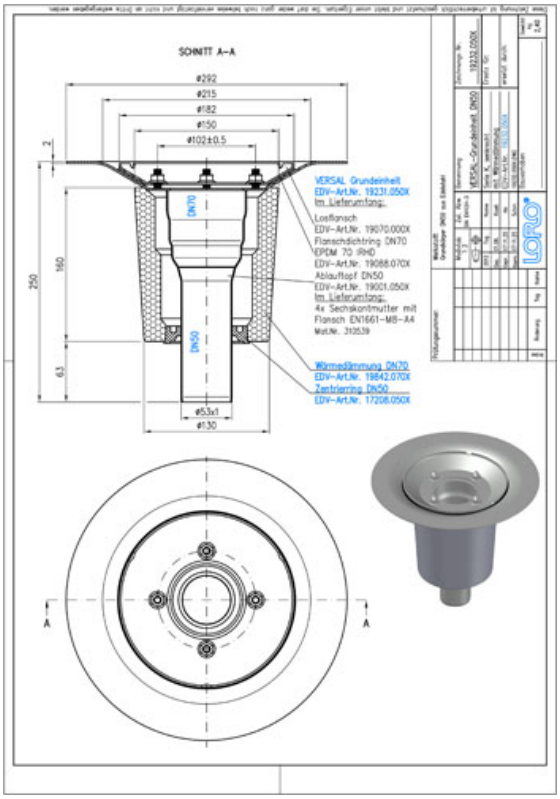

Artikkeldata

EAN-kode	**4038088040485**
ETIM-klasse	**EC004949**
Nominell diameter	**DN 50**
Utvendige mål (HxBxL)	**292 x 292 x 250 mm**
Vekt	**2,40 Kg (STK)**
Produktgruppe	**4**
Tolltariffnummer	**73072980**
Materiale / Farge	**Edelstahl, Silber**

Bruksanvisning

kein Verwendungshinweis notwendig

Nedlastinger

Alles online

Monteringsanvisning (PDF)
Godkjenning (PDF)
CAD 3D (DWG)
Måltegning (PDF)
Aufbauschema (PDF)
BIM 3D (STEP)
Brosjyre (PDF)
CAD 2D (DXF)
BIM 3D (IFC)