LORO-VERSAL BALKONABL.GRUNDEINH.SENKR.M.

LORO-VERSAL balcony drain basic unit vertical with insulation made of stainless steel DN 50

Descriere

LORO-VERSAL balcony drain base unit with clamping flange, series K, according to DIN EN 1253 with raised quality standard, made of stainless steel, vertical outlet, with thermal insulation, consisting of drain pot, flange sealing ring, loose flange, DN50

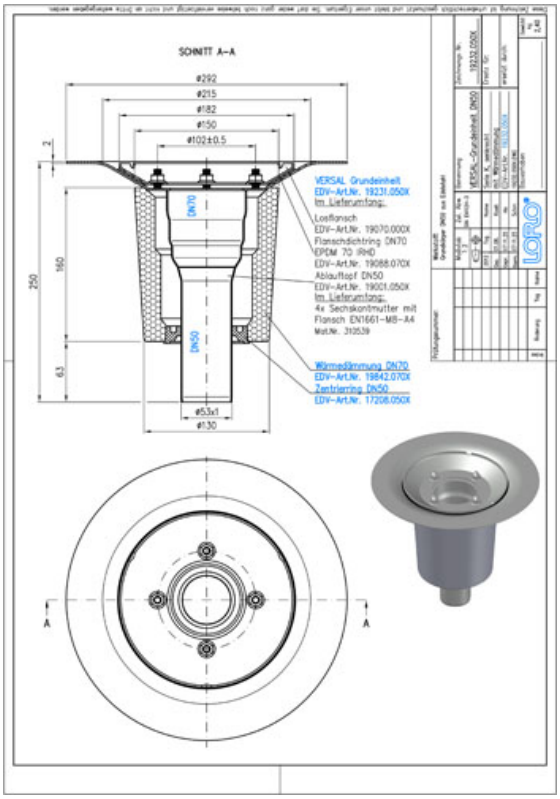

Date articol

Cod EAN	4038088040485
Clasă ETIM	EC004949
Diametru nominal	DN 50
Dimensiuni exterioare (ÎxLxA)	292 x 292 x 250 mm
Greutate	2,40 Kg (STK)
Grupă de produse	4
Număr tarif vamal	73072980
Material / Culoare	Edelstahl, Silber

Notă de utilizare

kein Verwendungshinweis notwendig

Descărcări

Alles online

[Instrucțiuni de montaj (PDF)](#)
[Desen CAD (PDF)](#)
[Broșură (PDF)](#)
[Certificat (PDF)](#)
[Aufbauschema (PDF)](#)
[CAD 2D (DXF)](#)
[CAD 3D (DWG)](#)
[BIM 3D (STEP)](#)
[BIM 3D (IFC)](#)