LORO-VERSAL BALKONABL.GRUNDEINH.SENKR.O.

LORO-VERSAL Balcony Drain Basic Unit vertical without insulation made of stainless steel DN 50

Beskrivelse

LORO-VERSAL balcony drain base unit with clamping flange, series K, according to DIN EN 1253 with raised quality standard, made of stainless steel, vertical outlet, without thermal insulation, consisting of drain pot, flange sealing ring, loose flange, DN50

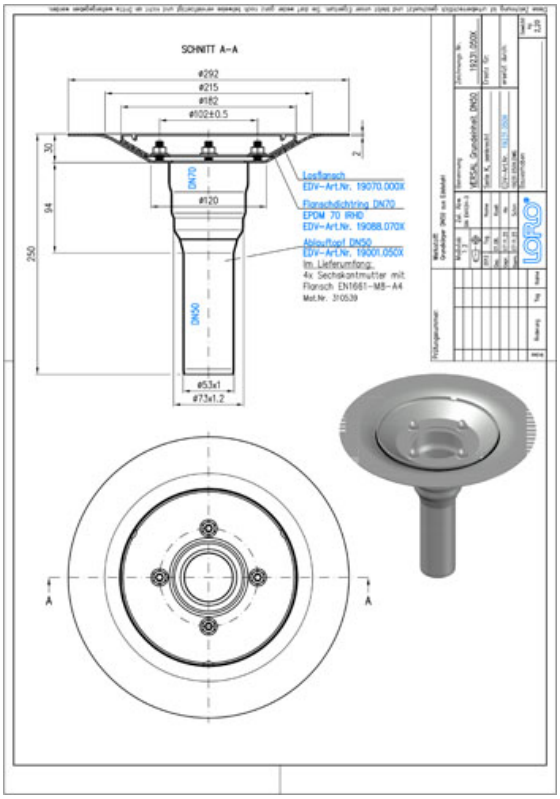

Artikeldata

EAN-kode	**4038088040461**
ETIM Klasse	**EC004949**
Nominel diameter	**DN 50**
Ydermål (HxBxL)	**292 x 292 x 250 mm**
Vægt	**2,20 Kg (STK)**
Produktgruppe	**4**
Toldtarifnummer	**73072980**
Materiale / Farve	**Edelstahl, Silber**

Brugsanvisning

kein Verwendungshinweis notwendig

Downloads

Alles online

Installationsvejledning (PDF)
Certifikat (PDF)
CAD 3D (DWG)
Måltegning (PDF)
Aufbauschema (PDF)
BIM 3D (STEP)
Brochure (PDF)
CAD 2D (DXF)
BIM 3D (IFC)