LORO-ABDECKROSETTE BALKONE.F.ROHR SER.H,

LORO cover rosette balconies for pipe series HHFK DN 70

Opis

LORO balcony drain collar for covering the slab piercing underneath the balcony slab, made of stainless steel 1.4301, with feed-through for LORO-X pipe, for balcony drain series H, HF, K, DN70

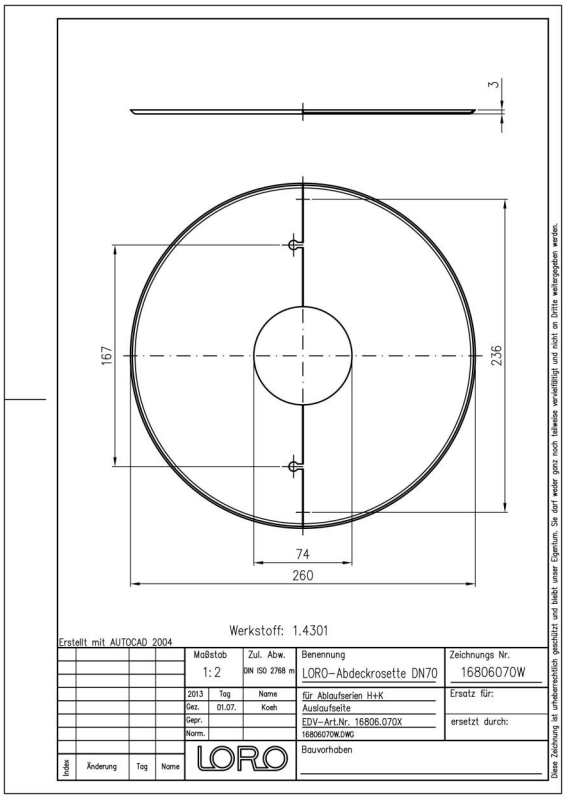

Podatki o izdelku

EAN koda	4038088066287
ETIM razred	EC011560
Nazivni premer	DN 70
Zunanje mere (VxŠxD)	260 x 260 x 3 mm
Teža	0,40 Kg (STK)
Skupina izdelkov	4
Carinska tarifna številka	73072980
Material / Barva	Edelstahl, Silber

Opomba za uporabo

kein Verwendungshinweis notwendig

Prenosi

Alles online

Navodila za vgradnjo (PDF)
CAD 2D (DXF)
BIM 3D (IFC)
Merska risba (PDF)
CAD 3D (DWG)
Prospekt (PDF)
BIM 3D (STEP)