LORO-VERSAL ABL.KÖRP.F.BALKONGESCH.O.GEW

LORO-VERSAL drain body for balcony floors without thread DN 50

Opis

LORO-X VERSAL direct balcony drain, series J with clamping ring, one-piece, without thermal insulation, vertical outlet, according to DIN EN 1253 with raised quality standard, made of steel, hot-dip galvanized, with long-life coating according to DIN EN ISO 2178 on the basis of a 2-component epoxy combination, colour: red-brown, without thread and long socket, for balcony floors, DN50

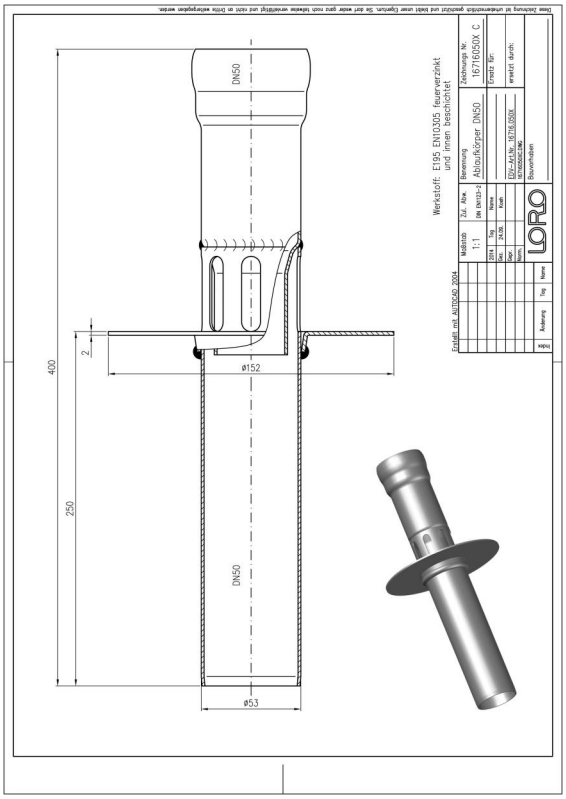

Podaci o artiklu

EAN kod	**4038088072691**
ETIM klasa	**EC011398**
Nazivni promjer	**DN 50**
Vanjske mjere (VxŠxD)	**152 x 152 x 400 mm**
Težina	**1,20 Kg (STK)**
Grupa proizvoda	**4**
Carinski tarifni broj	**73089098**
Materijal / Boja	**Stahl feuerverzinkt, Silber**

Napomena za upotrebu

kein Verwendungshinweis notwendig

Preuzimanja

Alles online

Upute za ugradnju (PDF)
Certifikat (PDF)
CAD (DWG)
Dimenzijski crtež (PDF)
Aufbauschema (PDF)
Prospekt (PDF)
CAD 2D (DXF)