LORO-VERSAL ABL.KÖRP.M.LANGMU.150-250 MM

LORO-VERSAL drain body with long sleeve 150 -250 mm ceiling thickness DN 70

Beschrijving

LORO-VERSAL direct drain body with clamping ring, with long socket, connecting thread and sealing, series J, for balcony floors and lower balconies, made of steel, hot-dip galvanized, long-life inside coating according to DIN EN ISO 2178 on the basis of a 2-component epoxy combination, colour: red-brown, for slab thickness 150 - 250 mm, DN70

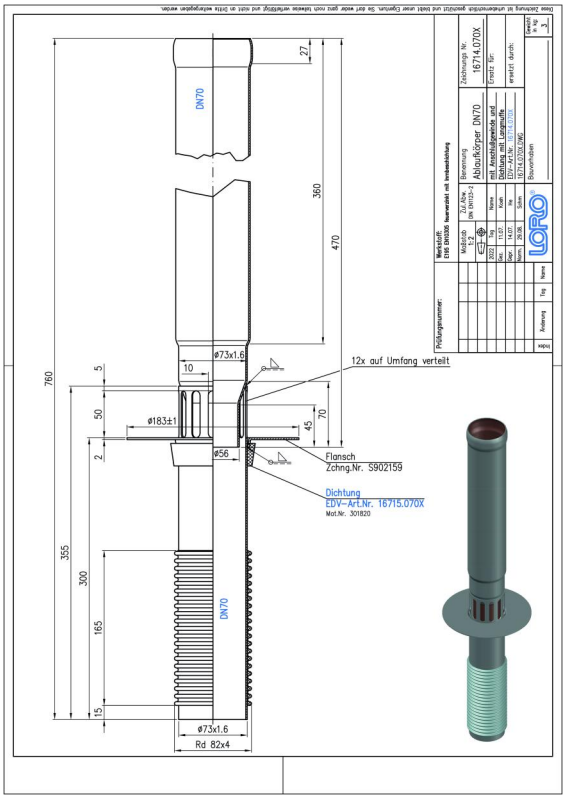

Artikelgegevens

EAN-code	**4038088051184**
ETIM Klasse	**EC011398**
Nominale diameter	**DN 70**
Buitenafmetingen (HxBxL)	**183 x 183 x 760 mm**
Gewicht	**3,00 Kg (STK)**
Productgroep	**4**
Douanetariefnummer	**73089098**
Materiaal / Kleur	**Stahl feuerverzinkt, Silber**

Gebruiksaanwijzing

kein Verwendungshinweis notwendig

Downloads

Alles online

Installatiehandleiding (PDF)
Maattekening (PDF)
Brochure (PDF)
Certificaat (PDF)
Aufbauschema (PDF)
CAD 2D (DXF)
CAD 3D (DWG)
BIM 3D (STEP)
BIM 3D (IFC)