LORO-VERSAL ABL.KÖRP.M.LANGMU.150-250 MM

LORO-VERSAL drain body with long sleeve 150 -250 mm ceiling thickness DN 70

Opis

LORO-VERSAL direct drain body with clamping ring, with long socket, connecting thread and sealing, series J, for balcony floors and lower balconies, made of steel, hot-dip galvanized, long-life inside coating according to DIN EN ISO 2178 on the basis of a 2-component epoxy combination, colour: red-brown, for slab thickness 150 - 250 mm, DN70

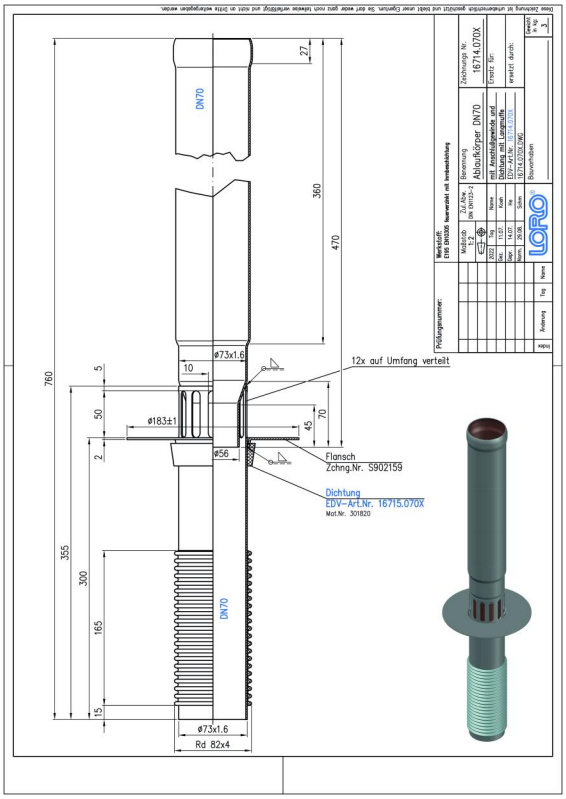

Podaci o artiklu

EAN kod	**4038088051184**
ETIM klasa	**EC011398**
Nazivni promjer	**DN 70**
Vanjske mjere (VxŠxD)	**183 x 183 x 760 mm**
Težina	**3,00 Kg (STK)**
Grupa proizvoda	**4**
Carinski tarifni broj	**73089098**
Materijal / Boja	**Stahl feuerverzinkt, Silber**

Napomena za upotrebu

kein Verwendungshinweis notwendig

Preuzimanja

Alles online

Upute za ugradnju (PDF)
Dimenzijski crtež (PDF)
Prospekt (PDF)
Certifikat (PDF)
Aufbauschema (PDF)
CAD 2D (DXF)
CAD 3D (DWG)
BIM 3D (STEP)
BIM 3D (IFC)