LORO-X BALCONY DRAINS, SERIES E+F, VERTIKAL SOCKET, WITH THERMAL INSULATION DN 70

LORO-X balcony drain vertical with insulation DN 70

Description

LORO balcony drain pot for series E and F, according to DIN EN 1253 with raised quality standard, made of steel, hot-dip galvanized, long-life inside coating according to DIN EN ISO 2178 on the basis of a 2-component epoxy combination, colour: red-brown, vertical outlet, with thermal insulation, as single part without accessories, DN70

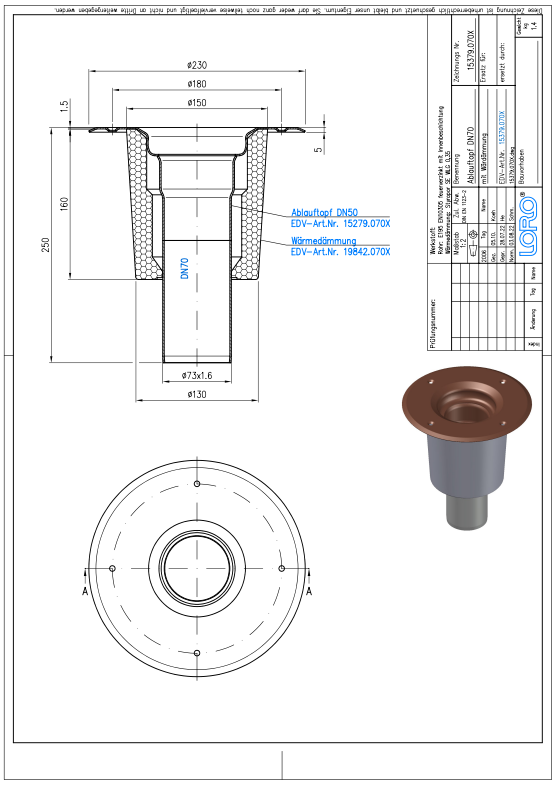

Article information

EAN Code	4038088008058
ETIM Class	EC011398
Nominal diameter	DN 70
Outside measurements (HxWxL)	230 x 230 x 250 mm
Weight	1,40 Kg (STK)
Product group	4
Customs tariff number	73089098
Material / Color	Stahl feuerverzinkt, Silber

Usage note

kein Verwendungshinweis notwendig

Downloads

Installation (PDF)
Certificate (PDF)
BIM 3D (STEP)
CAD drawing (PDF)
CAD 2D (DXF)
BIM 3D (IFC)
Brochure (PDF)
CAD 3D (DWG)

Alles online