LORO-X ABLAUFTOPF,SENKR,M.BRANDSCHUTZHÜ.

LORO-X drain pan vertical with fire protection sleeve for series E+F DN 50

Description

LORO-X balcony drain pot, fire protection system, series E+F, general building authority test certificate no. P-MPA-E-09-010, one-piece, with thermal insulation, vertical outlet, according to DIN EN 1253 with raised quality standard, made of steel, hot-dip galvanized, with long-life coating according to DIN EN ISO 2178 on the basis of a 2-component epoxy combination, colour: red-brown, DN50

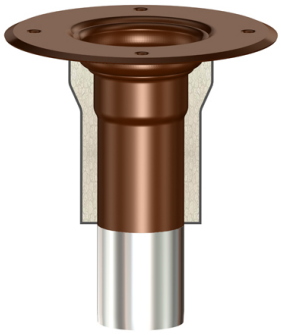

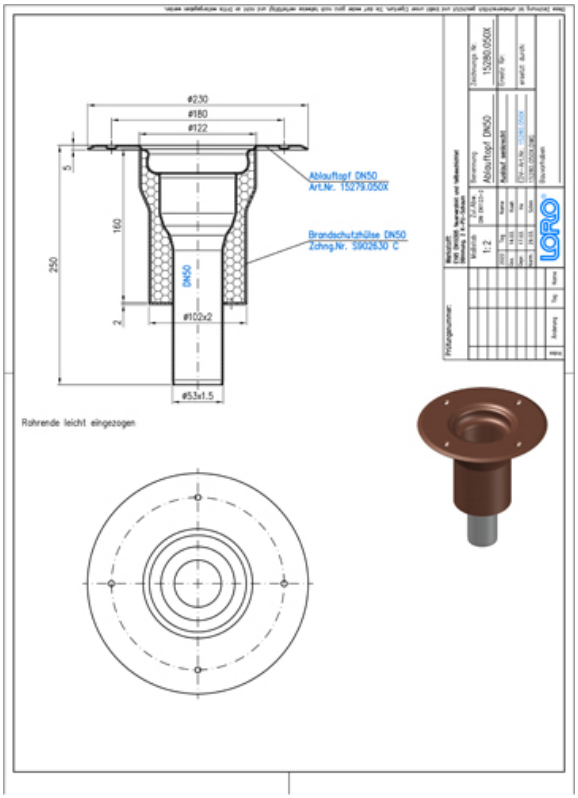

Données de l'article

Code EAN	**4038088096321**
Classe ETIM	**EC011398**
Diamètre nominal	**DN 50**
Poids	**1,90 Kg (STK)**
Groupe de produits	**4**
Numéro tarifaire douanier	**73089098**
Matériau / Couleur	**Stahl feuerverzinkt, Silber**

Note d'utilisation

kein Verwendungshinweis notwendig

Téléchargements

Dessin dimensionnel (PDF)
CAD 2D (DXF)
CAD 3D (DWG)
BIM 3D (STEP)
BIM 3D (IFC)

Alles online