LORO-X ABLAUFTOPF,SENKR,M.BRANDSCHUTZHÜ.

LORO-X drain pan vertical with fire protection sleeve for series E+F DN 50

Descripción

LORO-X balcony drain pot, fire protection system, series E+F, general building authority test certificate no. P-MPA-E-09-010, one-piece, with thermal insulation, vertical outlet, according to DIN EN 1253 with raised quality standard, made of steel, hot-dip galvanized, with long-life coating according to DIN EN ISO 2178 on the basis of a 2-component epoxy combination, colour: red-brown, DN50

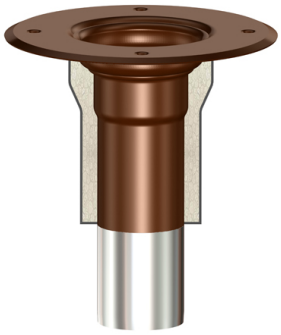

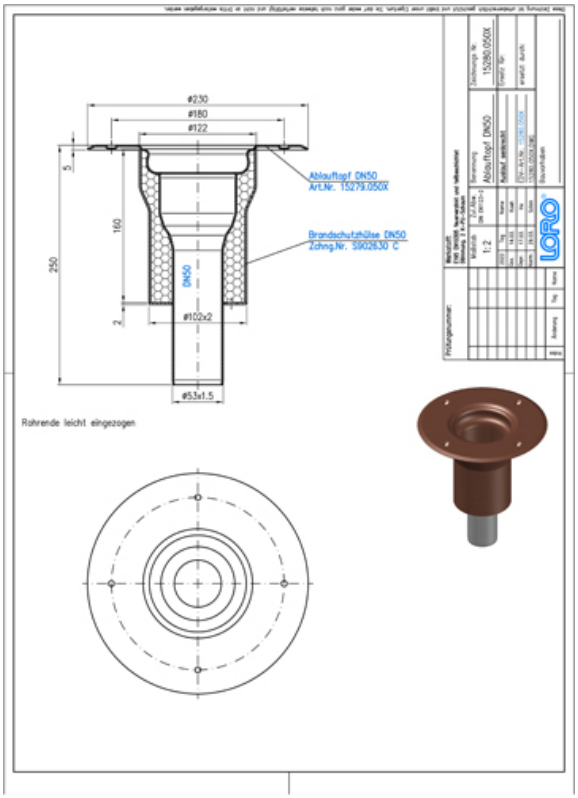

Datos del artículo

Código EAN	4038088096321
Clase ETIM	EC011398
Diámetro nominal	DN 50
Peso	1,90 Kg (STK)
Grupo de productos	4
Número de arancel aduanero	73089098
Material / Color	Stahl feuerverzinkt, Silber

Nota de uso

kein Verwendungshinweis notwendig

Descargas

Dibujo dimensional (PDF)
CAD 2D (DXF)
CAD 3D (DWG)
BIM 3D (STEP)
BIM 3D (IFC)

Alles online