LORO-X ABLAUFTOPF,SENKR,M.BRANDSCHUTZHÜ.

LORO-X drain pan vertical with fire protection sleeve for series E+F DN 50

Opis

LORO-X balcony drain pot, fire protection system, series E+F, general building authority test certificate no. P-MPA-E-09-010, one-piece, with thermal insulation, vertical outlet, according to DIN EN 1253 with raised quality standard, made of steel, hot-dip galvanized, with long-life coating according to DIN EN ISO 2178 on the basis of a 2-component epoxy combination, colour: red-brown, DN50

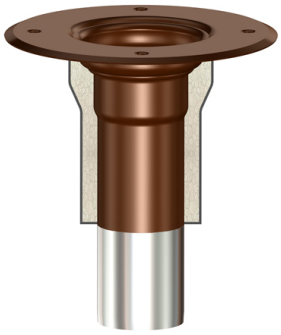

Dane artykułu

Kod EAN	4038088096321
Klasa ETIM	EC011398
Średnica nominalna	DN 50
Waga	1,90 Kg (STK)
Grupa produktów	4
Numer taryfy celnej	73089098
Materiał / Kolor	Stahl feuerverzinkt, Silber

Wskazówki dotyczące użytkowania

kein Verwendungshinweis notwendig

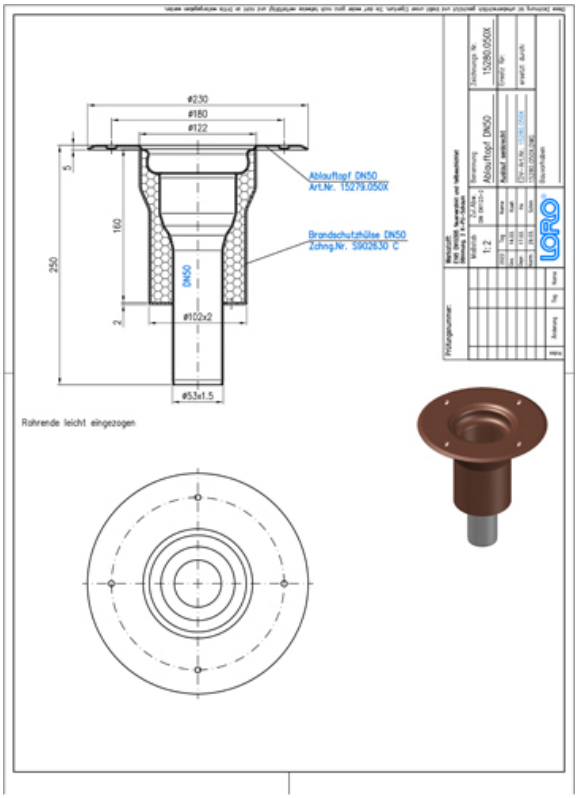

Pobieranie

Alles online

[Rysunek wymiarowy (PDF)](#) [CAD 2D (DXF)](#) [CAD 3D (DWG)](#)
[BIM 3D (STEP)](#) [BIM 3D (IFC)](#)