LORO-WASSERSPEIER M.KLEMMFL.250 MM EDELS

LORO water spout with clamping flange 250 mm made of stainless steel DN 50

Beskrivelsestekst

LORO-X spout, for emergency drainage with gravity flow, discharge rate 0.5 l/s at 35 mm water level on the roof, with clamping flange, as loose and fixed flange construction, made of stainless steel, outlet pipe 250 mm, according to DIN EN 1253 with raised quality standard, proof of performance according to system data sheet LX572, made of stainless steel, DN50



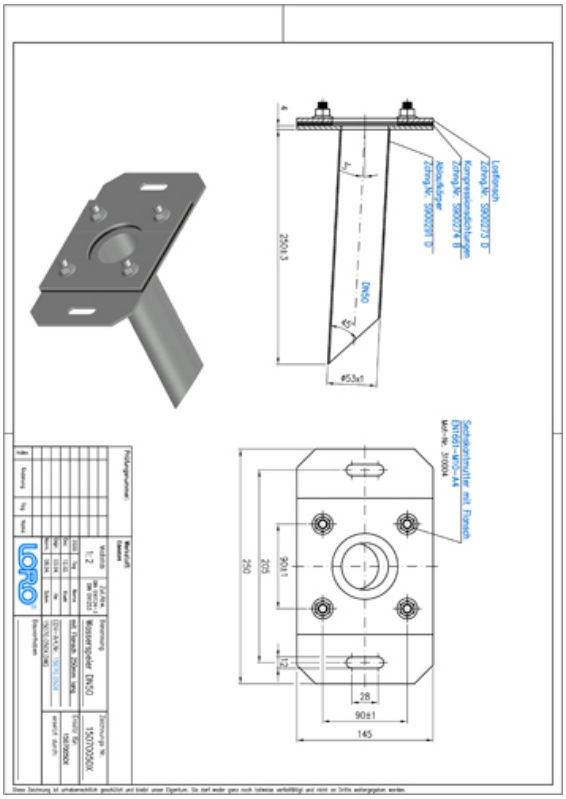

Artikkeldata

EAN-kode	4038088072943
ETIM-klasse	EC011386
Nominell diameter	DN 50
Nominell lengde/grad	250
Utvendige mål (HxBxL)	250 x 145 x 279 mm
Vekt	2,20 Kg (STK)
Produktgruppe	4
Tolltariffnummer	73072980
Materiale / Farge	Edelstahl, Silber

Bruksanvisning

kein Verwendungshinweis notwendig

Nedlastinger

Alles online

Måltegning (PDF)
CAD 2D (DXF)
BIM 3D (IFC)
Brosjyre (PDF)
CAD 3D (DWG)
Systemdatablad LX 572
BIM 3D (STEP)