Scheda tecnica del prodotto

LORO_Produkt-Datenblatt_14729.000X_it.pdf
Articolo 14729.000X
29.11.2026, 20:27

LX-RETENTIONSEINH.F.ATTIKA SR.79,88,89

LORO-X retention unit without strainer basket made of stainless steel for series 79 88 89 Emergency drainage

Voce di capitolato

LORO-X VARIOFIT flow aid, without strainer, building-related design please indicate desired weir height when ordering, for emergency drainage with gravity flow, variable weir height, to fit parapet drains series 79, 88 and 89, DN 50 to DN 100

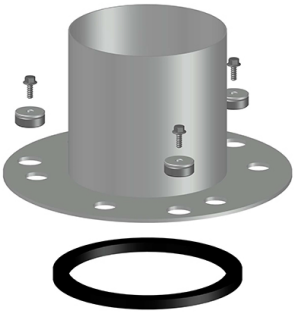

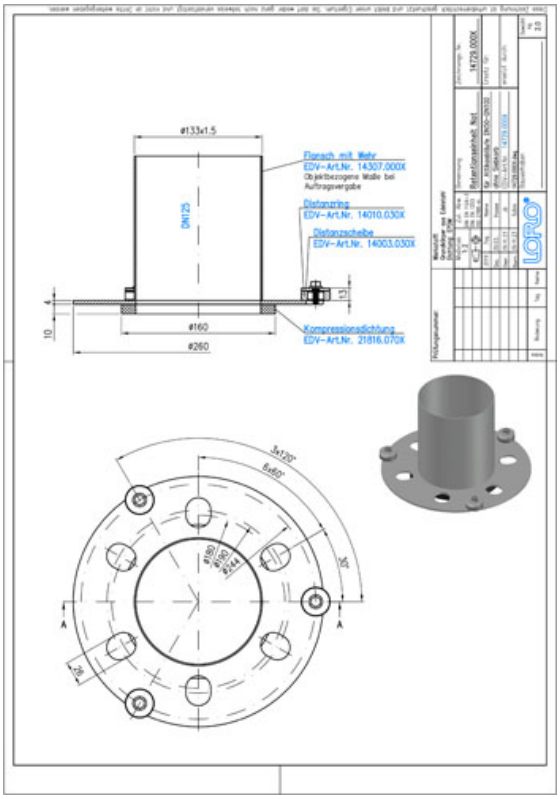

Dati articolo

Codice EAN	4038088103289
Classe ETIM	EC011398
Peso	2,00 Kg (STK)
Gruppo prodotti	9
Numero tariffa doganale	73072980
Materiale / Colore	Edelstahl, Silber

Note d'uso

kein Verwendungshinweis notwendig

Download

Alles online

Disegno dimensionale (PDF)
Aufbauschema (PDF)
BIM 3D (STEP)
Brochure (PDF)
CAD 2D (DXF)
BIM 3D (IFC)
Certificato (PDF)
CAD 3D (DWG)