LX-RETENTIONSEINH.F.DL.SR.84,NOT.

LORO-X retention unit without strainer basket made of stainless steel for series 84 emergency drainage DN 125

Opis

LORO-X VARIOFIT flow aid,without strainer, building-related design please indicate desired weir height when ordering, for emergency drainage with gravity flow, variable weir height, to fit DRAINLET flat roof drain, series 84(DL), DN125

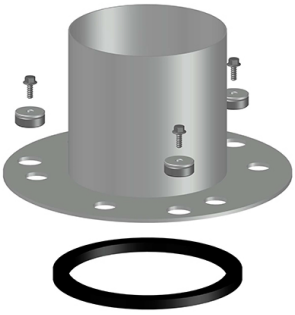

Dane artykułu

Kod EAN	4038088103265
Klasa ETIM	EC011398
Średnica nominalna	DN 125
Waga	2,90 Kg (STK)
Grupa produktów	9
Numer taryfy celnej	73072980
Materiał / Kolor	Edelstahl, Silber

Wskazówki dotyczące użytkowania

kein Verwendungshinweis notwendig

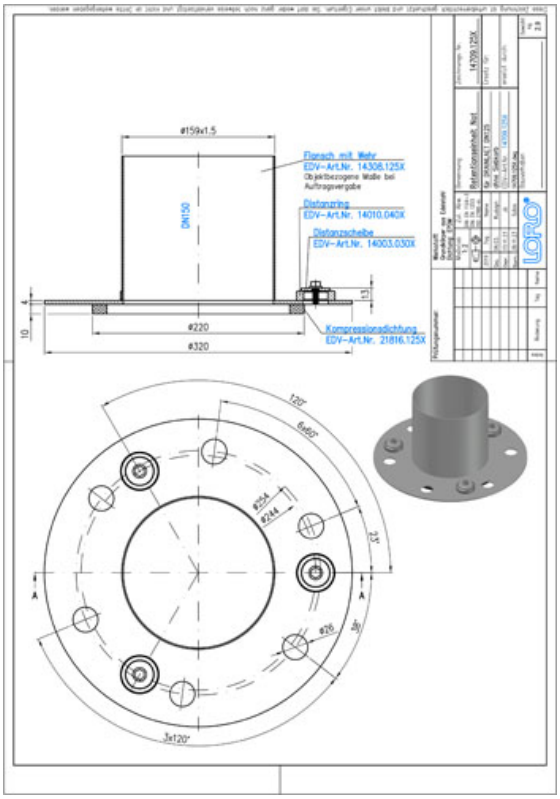

Pobieranie

Alles online

[Rysunek wymiarowy (PDF)]
[Aufbauschema (PDF)]
[BIM 3D (STEP)]
[Broszura (PDF)]
[CAD 2D (DXF)]
[BIM 3D (IFC)]
[Certyfikat (PDF)]
[CAD 3D (DWG)]