LX-RETENTIONSEINH.F.DL.SR.84,NOT.

LORO-X retention unit without strainer basket made of stainless steel for series 84 emergency drainage DN 125

Opis

LORO-X VARIOFIT flow aid,without strainer, building-related design please indicate desired weir height when ordering, for emergency drainage with gravity flow, variable weir height, to fit DRAINLET flat roof drain, series 84(DL), DN125

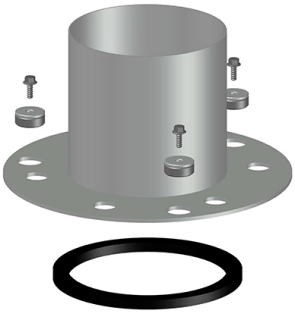

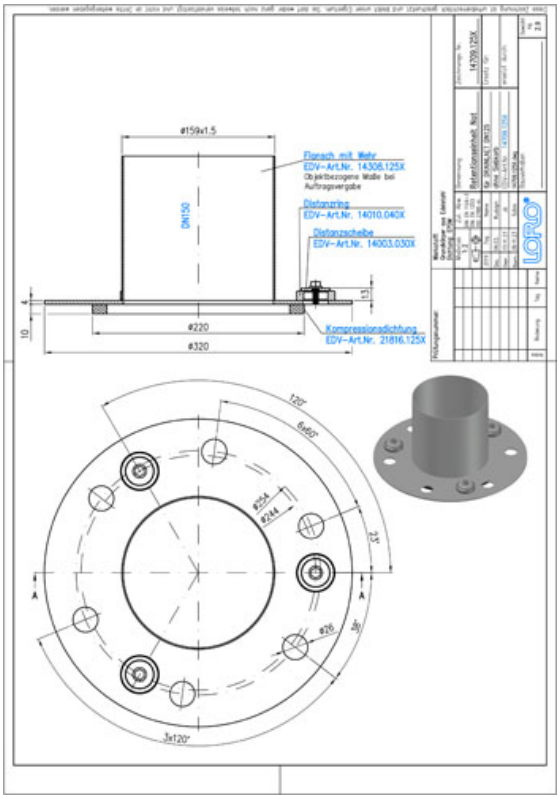

Podatki o izdelku

EAN koda	4038088103265
ETIM razred	EC011398
Nazivni premer	DN 125
Teža	2,90 Kg (STK)
Skupina izdelkov	9
Carinska tarifna številka	73072980
Material / Barva	Edelstahl, Silber

Opomba za uporabo

kein Verwendungshinweis notwendig

Prenosi

Alles online

Merska risba (PDF)
Aufbauschema (PDF)
BIM 3D (STEP)
Prospekt (PDF)
CAD 2D (DXF)
BIM 3D (IFC)
Certifikat (PDF)
CAD 3D (DWG)