LX-RETENTIONSEINH.F.DL.SR.84,NOT.

LORO-X retention unit without strainer basket made of stainless steel for series 84 emergency drainage DN 70

Beschrijving

LORO-X VARIOFIT flow aid, without strainer, building-related design please indicate desired weir height when ordering, for emergency drainage with gravity flow, variable weir height, to fit DRAINLET flat roof drain, series 84(DL), DN 70

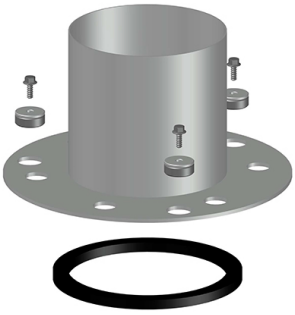

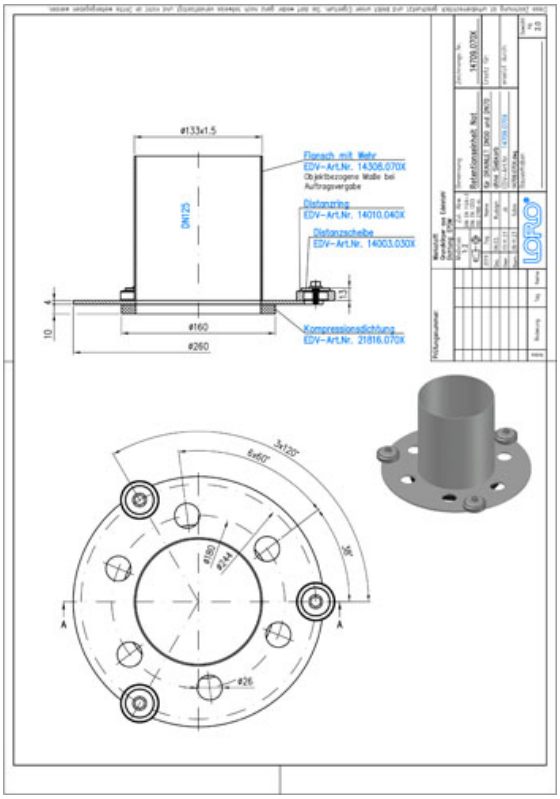

Artikelgegevens

EAN-code	4038088103241
ETIM Klasse	EC011398
Nominale diameter	DN 70
Gewicht	2,00 Kg (STK)
Productgroep	9
Douanetariefnummer	73072980
Materiaal / Kleur	Edelstahl, Silber

Gebruiksaanwijzing

kein Verwendungshinweis notwendig

Downloads

Alles online

Maattekening (PDF)
Aufbauschema (PDF)
BIM 3D (STEP)
Brochure (PDF)
CAD 2D (DXF)
BIM 3D (IFC)
Certificaat (PDF)
CAD 3D (DWG)