LX-RETENTIONSEINH.F.DL.SR.84,HPT.

LORO-X retention unit without strainer basket made of stainless steel for series 84 main drainage DN 70

Descripción

LORO-X VARIOFIT flow aid for retention roof drainage,without strainer, building-related design, please contact LOROWERK for the determination of the necessary retention openings, for the main drainage and height-adjustable retention pipe, to fit DRAINLET flat roof drain, series 84(DL) DN 70

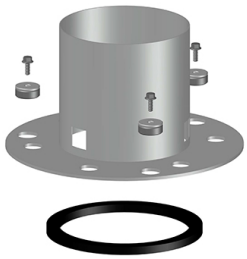

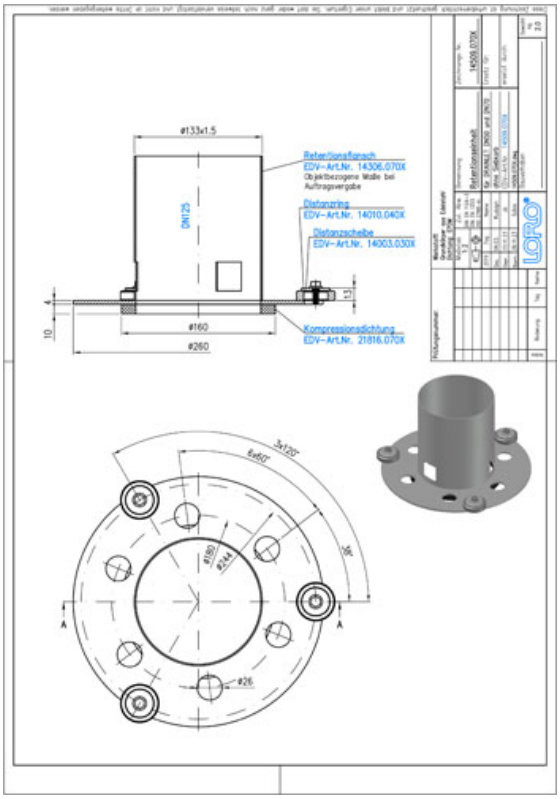

Datos del artículo

Código EAN	4038088103210
Clase ETIM	EC011398
Diámetro nominal	DN 70
Peso	2,00 Kg (STK)
Grupo de productos	9
Número de arancel aduanero	73072980
Material / Color	Edelstahl, Silber

Nota de uso

kein Verwendungshinweis notwendig

Descargas

Alles online

Dibujo dimensional (PDF)
Aufbauschema (PDF)
BIM 3D (STEP)
Folleto (PDF)
CAD 2D (DXF)
BIM 3D (IFC)
Certificado (PDF)
CAD 3D (DWG)