## LX-RETENTIONSEINH.F.DL.SR.84,HPT.

**LORO-X retention unit without strainer basket made of stainless steel for series 84 main drainage DN 70**

### Descriere

LORO-X VARIOFIT flow aid for retention roof drainage,without strainer, building-related design, please contact LOROWERK for the determination of the necessary retention openings, for the main drainage and height-adjustable retention pipe, to fit DRAINLET flat roof drain, series 84(DL) DN 70

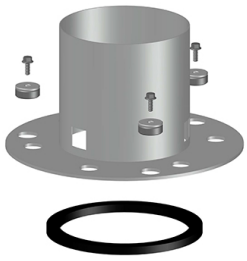

### Date articol

| | |
|---|---|
| Cod EAN | 4038088103210 |
| Clasă ETIM | EC011398 |
| Diametru nominal | DN 70 |
| Greutate | 2,00 Kg (STK) |
| Grupă de produse | 9 |
| Număr tarif vamal | 73072980 |
| Material / Culoare | Edelstahl, Silber |

### Notă de utilizare

kein Verwendungshinweis notwendig

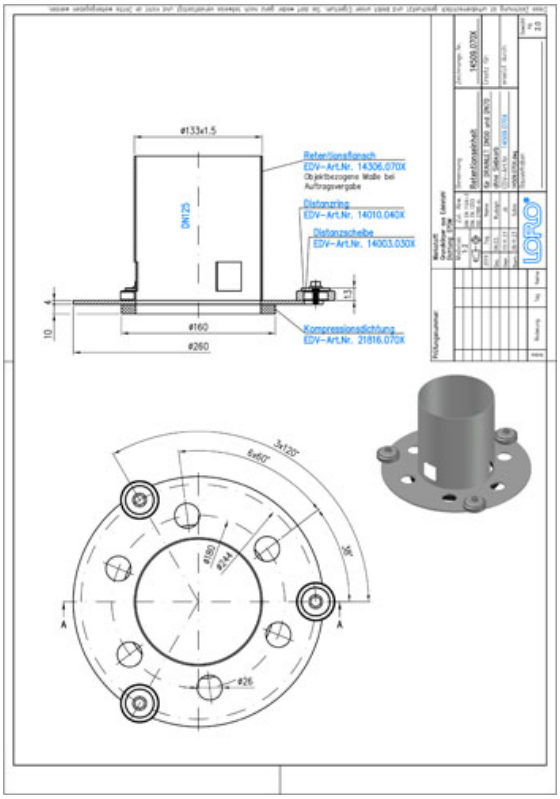


### Descărcări

Alles online

Desen CAD (PDF)
Aufbauschema (PDF)
BIM 3D (STEP)
Broșură (PDF)
CAD 2D (DXF)
BIM 3D (IFC)
Certificat (PDF)
CAD 3D (DWG)